S700

Digital Servo Amplifier S701x2…S724x2 (STO dual channel)

Instruction Manual

Edition 07/2014
Translation of the original instruction manual.
Valid for Hardware Revision 02.10

LISTED
IND. CONT. EQ.
1VD4

АЯ46

RoHS

Keep all manuals as a product component
during the life span of the product.
Pass all manuals to future users and owners
of the product.

Record of Document Revisions:

Revision	Remarks
02/2010	Product brand, memory card, part number scheme, faults, EnDat 2.2, Multilink, certificates, GOST-R, SSI input (X5 clock - inverted), PosI/O-Monitor added, Safety Card S1 added, TÜV proved safety, FAN option F2, X4A/3 changed from XGND to STO2-Enable, Stop and Emergency Stop examples moved to WIKI
07/2010	New DriveGUI icon, bridge DGND-GND (dig-I/O) changed, type 6 integrated, transport and storage classes
12/2010	Expansion module 2CAN, company name, name plate, CE certificate
06/2011	Part number scheme updated, encoder emulation via X1, BiSS-C, Feedback systems visualized, STO SIL3/PLe, certificates removed
09/2011	New Certificates added, safety characteristic data updated
06/2012	Fusing corrected, expansion card FB2to1 new, Emergency Stop updated
07/2013	Feedback - ENCVON note, FBTYPE 34, KCM modules, CE declaration of conformity, formal improvements, BiSS C Renishaw, according to IEC 82079, safety cards S1/S2 replaced by S3/S4, diagram "Behavior in the event of an error" updated.
08/2013	Correction S4 safety card (SLP not possible)
12/2013	Hint automatic restart, fault table, switch off behaviour in case of faults, SSI emulation timing updated, safe to touch voltage 40V->60V
05/2014	Warning symbols updated, fusing brake resistor/dc bus, notes dc bus coupling, X8Y set with X4A mini
07/2014	Wiring thermo sensor updated (Feedback)

Hardware Revision (HR)

Hardware Revision	usable Firmware Revision	usable DRIVEGUI.EXE Revision	Remarks
00.20	2.21	1.30 Build 0060	prototype
01.21	2.50 - 3.49	≥ 1.30 Build 0060	short housing, X5, X6, X7
02.00	3.50 - 4.99	≥ 1.30 Build 0063	connector X0 and X8 mirror-operated, EtherCAT onboard, charging circuit (parallel connection ability)
02.10	≥ 5.18	≥ 2.20 Build 0004	memory card usable, two channel STO, X4A coded to pin 2

WINDOWS is a registered trademark of Microsoft Corporation
HIPERFACE is a registered trademark of Max Stegmann GmbH
SERCOS s a registered trademark of sercos® international e.V.
EnDat is a registered trademark of Dr.Johannes Heidenhain GmbH
EtherCAT is a registered trademark and patented technology, licensed by Beckhoff Automation GmbH

Technical changes which improve the performance of the device may be made without prior notice!
Printed in the Federal Republic of Germany
All rights reserved. No part of this work may be reproduced in any form (by photocopying, microfilm or any other method) or stored, processed, copied or distributed by electronic means without the written permission of Kollmorgen Europe GmbH.

Seite

1 General
1.1 About this manual . . . 7
1.2 Notes for the printed edition (paper version) . . . 7
1.3 Notes for the online edition (PDF format) . . . 7
1.4 Symbols used . . . 8
1.5 Standards used . . . 8
1.6 Abbreviations used . . . 9

2 Safety
2.1 You should pay attention to this . . . 10
2.2 Use as directed . . . 12
2.3 Prohibited use . . . 13
2.4 Handling . . . 13
2.4.1 Transport . . . 13
2.4.2 Packaging . . . 13
2.4.3 Storage . . . 14
2.4.4 Maintenance, Cleaning . . . 14
2.4.5 Disassembling . . . 14
2.4.6 Repair . . . 15
2.4.7 Disposal . . . 15

3 Approvals
3.1 Conformance with UL . . . 17
3.2 CE conformance . . . 18
3.2.1 European Directives and Standards for the machine builder . . . 18
3.2.2 CE Declaration of Conformity . . . 19
3.3 GOST-R conformance . . . 20
3.4 Functional Safety . . . 21
3.4.1 Safety Certificate S700 . . . 21
3.4.2 Safety Certificate S700 with Safety Card . . . 22

4 Package
4.1 Package supplied . . . 23
4.2 Nameplate . . . 23
4.3 Part number scheme . . . 24

5 Technical description
5.1 The S700 family of digital servo amplifiers . . . 25
5.2 Technical data . . . 28
5.2.1 Rated data S7xx0 . . . 28
5.2.2 Rated data S7xx6 . . . 29
5.2.3 Inputs, outputs, aux. voltage supply . . . 30
5.2.4 Connectors . . . 30
5.2.5 Recommended tightening torques . . . 30
5.2.6 Fusing . . . 30
5.2.7 Ambient conditions, ventilation, mounting position . . . 31
5.2.8 Conductor cross-sections . . . 31
5.3 Motor holding brake . . . 32
5.4 LED display . . . 33
5.5 Grounding system . . . 33
5.6 Dynamic braking (brake circuit) . . . 33
5.7 Switch-on and switch-off behavior . . . 36
5.7.1 Behavior in standard operation . . . 37
5.7.2 Behavior in the event of an error (with standard setting) . . . 38
5.8 Stop-, Emergency Stop-, Emergency Off Function to IEC 60204 . . . 39
5.8.1 Stop . . . 39
5.8.2 Emergency Stop . . . 40
5.8.3 Emergency Off . . . 40

Seite

5.9 Safety function STO 41
5.9.1 Safety characteristic data 41
5.9.2 Enclosure 41
5.9.3 Wiring 41
5.9.4 Important notes 42
5.9.5 Use as directed STO 42
5.9.6 Prohibited Use STO 42
5.9.7 Technical data and pinning 43
5.9.8 Functional description 44
5.9.9 Functional test 49
5.10 Shock-hazard protection 51
5.10.1 Leakage current 51
5.10.2 Residual current protective device (RCD) 51
5.10.3 Isolating transformers 51

6 Mechanical Installation

6.1 Important notes 53
6.2 Guide to mechanical installation 53
6.3 Assembly 54
6.4 Dimensions 55
6.5 Fan assembly 56

7 Electrical installation

7.1 Important notes 57
7.2 Guide to electrical installation 58
7.3 Wiring 59
7.3.1 Shielding connection to the front panel 60
7.3.2 Motor connector X9 with shielding connection 60
7.3.3 Technical data for connecting cables 61
7.4 Components of a servo system 62
7.5 Block diagram 63
7.6 Connector assignments 64
7.7 Connection diagram (Overview) 65
7.8 Electrical supply 66
7.8.1 Connection to various mains supply networks 66
7.8.2 24V auxiliary supply (X4) 68
7.8.3 Mains supply connection (X0), three phase 68
7.8.4 Mains supply connection (X0), two phase without neutral 68
7.8.5 Mains supply connection (X0), single phase with neutral 69
7.9 DC bus link (X8) 70
7.9.1 DC Bus topology 71
7.9.2 External brake resistor (X8) 72
7.9.3 Capacitor Module KCM 72
7.10 Motor and holding brake connection (X9) 74

Seite

7.11 Feedback systems 75
7.12 Primary and secondary feedback types 76
7.12.1 Resolver (X2) 77
7.12.2 Sine Encoder with BiSS analog (X1) 78
7.12.3 Encoder with BiSS digital (X1) 79
7.12.4 Sine Encoder with EnDat 2.1 (X1) 80
7.12.5 Encoder with EnDat 2.2 (X1) 81
7.12.6 Sine Encoder with HIPERFACE (X1) 82
7.12.7 Sine Encoder with SSI (X1) 83
7.12.8 Sine Encoder without data channel (X1) 84
7.12.9 Sine Encoder with Hall (X1) 85
7.12.10 ROD (AquadB) 5V, 1.5MHz (X1) 86
7.12.11 ROD (AquadB) 5V, 350kHz (X1) 87
7.12.12 ROD (AquadB) 5V, 350kHz with Hall (X1) 88
7.12.13 ROD (AquadB) 24V (X3) 89
7.12.14 ROD (AquadB) 24V with Hall (X3, X1) 90
7.12.15 SSI Encoder (X1) 91
7.12.16 Hall sensors (X1) 92
7.13 Electronic Gearing, Master-Slave operation 93
7.13.1 Encoder control types 93
7.13.2 Connection to stepper motor controllers (step and direction) 94
7.13.3 Master-slave operation 95
7.14 Encoder Emulation, position output 96
7.14.1 Incremental encoder output - A quad B (X1) 96
7.14.2 SSI encoder output (X1) 97
7.15 Digital and analog inputs and outputs 98
7.15.1 Analog Inputs (X3B) 98
7.15.2 Digital Inputs (X3A, X3B and X4A, X4B) 99
7.15.3 Digital Outputs (X3A, X3B) 101
7.16 RS232 interface, PC connection (X6) 102
7.17 CANopen interface (X6) 103
7.18 EtherNET interface (X7) 104
7.19 Memory card 105

8 Setup

8.1 Important notes 107
8.2 Setup software 108
8.2.1 Use as directed 108
8.2.2 Software description 108
8.2.3 Hardware requirements, operating systems 109
8.2.4 Installation under WINDOWS 109
8.3 Quickstart 110
8.3.1 Preparation 110
8.3.2 Connect 112
8.3.3 Important Screen Elements 113
8.3.4 Setup Wizard 114
8.3.5 Motion Service (Jog Mode) 117
8.3.6 More Setup Screens 118
8.4 Multi axis system 119
8.5 Keypad operation and LED display 119
8.5.1 Keypad operation 120
8.5.2 Status display 120
8.5.3 Standard menu 120
8.5.4 Advanced menu 121
8.6 Error messages 122
8.7 Warning messages 123
8.8 Trouble Shooting 124

Seite

9 Expansions

9.1 Expansion cards for slot 1 125
9.1.1 Guide to installation of expansion cards in slot 1 125
9.1.2 Expansion card -I/O-14/08- 126
9.1.3 Expansion card -PROFIBUS- 129
9.1.4 Expansion card -SERCOS- 130
9.1.5 Expansion card - DEVICENET - 132
9.1.6 Expansion card -SYNQNET- 135
9.1.7 Expansion card - FB-2to1 - 137
9.1.8 Expansion module -2CAN- 139
9.2 Expansion cards for slot 2 141
9.2.1 Guide to installation of expansion cards in slot 2 141
9.2.2 Option "F2", controlled Fan 141
9.2.3 Expansion cards "PosI/O" & "PosI/O-Monitor" 142
9.3 Expansion cards for slot 3 151
9.3.1 Guide to installation of expansion cards in slot 3 151
9.3.2 Option "F2", controlled Fan 151
9.3.3 Expansion cards "PosI/O" & "PosI/O-Monitor" 151
9.3.4 Expansion card "Safety 2-2" (S4) 152
9.3.5 Expansion card "Safety 1-2" (S3) 155

10 Appendix

10.1 Glossary 159
10.2 Order codes 161
10.2.1 Servo amplifiers 161
10.2.2 Memory Card 161
10.2.3 Expansion cards 162
10.2.4 Mating connectors 162
10.3 Repair- or Disposal request Telefax form 163
10.4 Index 164

1 General

1.1 About this manual

This manual describes the S701x-S724x series of digital servo amplifiers (standard version: 1.5A ...24A rated current).
S7480x and S7720x amplifiers are described in an additional manuals.

A more detailed description of the expansion cards that are currently available and the digital connection to automation systems can be found, together with our application notes, in Acrobat-Reader format on the accompanying CD-ROM (system requirements: WINDOWS, Internet Browser, Acrobat Reader) in different languages.

Technical data and dimensional drawings of accessories such as cables, brake resistors, mains supplies, etc., can be found in the accessories manual.

This documentation (PDF) can be printed out on any standard commercial printer.
A printed copy of the documentation is available from us at extra cost.

More background information can be found in our "Product WIKI", available at www.wiki-kollmorgen.eu.

1.2 Notes for the printed edition (paper version)

A printed version of the manual is enclosed with each product. For environmental reasons, the document was reduced in size and printed on DIN A5.

NOTE

Should you experience difficulties reading the font size of the scaled-down printed version, you can print and use the PDF version in DIN A4 format 1:1.

You can find the PDF version on the CD-ROM accompanying the product and on the Kollmorgen website.

1.3 Notes for the online edition (PDF format)

Bookmarks:
Table of contents and index are active bookmarks.
Table of contents and index in the text:
The lines are active cross references. Click on the desired line and the appropriate page is accessed.
Page numbers and chapter numbers in the text:
Page numbers and chapter numbers in the main text are active references. Click at the page number or chapter number to reach the indicated target.

1.4 Symbols used

Symbol	Indication
DANGER	Indicates a hazardous situation which, if not avoided, will result in death or serious injury.
WARNING	Indicates a hazardous situation which, if not avoided, could result in death or serious injury.
CAUTION	Indicates a hazardous situation which, if not avoided, could result in minor or moderate injury.
NOTICE	Indicates situations which, if not avoided, could result in property damage.
NOTE	This is not a safety symbol. This symbol indicates important notes.
	Warning of a danger (general). The type of danger is specified by the warning text next to it.
	Warning of danger from electricity and its effects.
	Warning of hot surfaces.
	Warning of suspended loads.

1.5 Standards used

Standard	Content
ISO 4762	Hexagon socket head cap screws
ISO 13849	Safety of machinery: Safety-related parts of control systems (former EN 954)
ISO 12100	Safety of machinery: Basic concepts, general principles for design
IEC 60085	Electrical insulation - Thermal evaluation and designation Maintenance
IEC 60204	Safety of Machinery: Electrical equipment of machinery
IEC 60364	Low-voltage electrical installations
IEC 60439	Low-Voltage Switchgear and Controlgear Assemblies
IEC 60529	Protection categories by housing (IP Code)
IEC 60664	Insulation coordination for equipment within low-voltage systems
IEC 60721	Classification of environmental conditions
IEC 61000	Electromagnetic compatibility (EMC)
IEC 61131	Programmable controllers
IEC 61491	Electrical equipment of industrial machines – Serial data link for real-time communications between controls and drives.
IEC 61508	Functional safety of electrical/electronic/programmable electronic safety-related systems
IEC 61800	Adjustable speed electrical power drive systems
IEC 62061	Functional safety of electrical/electronic/programmable electronic safety-related systems
ISO 82079	Preparation of instructions for use - Structuring, content and presentation
UL 840	UL Standard for Safety for Insulation Coordination Including Clearances and Creepage Distances for Electrical Equipment
UL 508C	UL Standard for Safety Power Conversion Equipment

IEC International Electrotechnical Commission ISO International Organization for Standardization
UL Underwriters Laboratories

1.6 Abbreviations used

Abbrev.	Meaning
AGND	Analog ground
xAF	Fuse, x Amps, fast
xAM	Fuse, x Amps, medium
xAT	Fuse, x Amps, slow
BTB/RTO	Ready to operate
CAN	Fieldbus (CANopen)
CE	Communité Europeenne
CLK	Clock signal
COM	Serial interface for a Personal Computer
DGND	Digital ground (for 24V, digital inputs and digital outputs)
Disk	Magnetic storage (diskette, hard disk)
EEPROM	Electrically erasable programmable memory
EMC	Electromagnetic compatibility
F-SMA	Fiber Optic Cable connector according to IEC 60874-2
IGBT	Insulated-gate bipolar transistor
LED	Light-emitting diode
MB	Megabyte
NI	Zero pulse
PC	Personal computer
PL	Performance Level
PLC	Programmable logic control
PWM	Pulse-width modulation
RAM	Volatile memory
R_{Brake} or R_B	Brake resistor (sometimes called "regen resistor")
RBext	External brake resistor
RBint	Internal brake resistor
RES	Resolver
ROD	Digital encoder (A quad B)
SDI	Safe direction
SIL	Safety Integrity Level
SIL CL	Safety Integrity Level Claim Limit
SLI	Safe limited increments
SLP	Safe limited position
SLS	Safely limited speed
SOS	Safe operating stop
SS1	Safe stop 1
SS2	Safe stop 1
SSI	Synchronous serial interface
SSR	Safe speed range
STO	Safe torque off (former AS)
V AC	Alternating voltage
V DC	DC voltage
VDE	Society of German Electrical Technicians

2 Safety

This section helps you to recognize and avoid dangers to people and objects.

2.1 You should pay attention to this

Read the documentation!

Read the available documentation before installation and commissioning. Improper handling of the servo amplifiers can cause harm to people or damage to property. The operator must therefore ensure that all persons entrusted to work on the S700 have read and understood the manual and that the safety notices in this manual are observed.

Check the Hardware Revision!

Check the Hardware Revision Number of the product (see product label). This revision number must match the Hardware Revision Number on the cover page of the manual. If the numbers do not match up, visit the Tech-WIKI (http://www.wiki-kollmorgen.eu). The 'Others/Archive' (Sonstiges/Archive) section contains the various manual versions based on the hardware version number.

Pay attention to the technical data!

Adhere to the technical data and the specifications on connection conditions (rating plate and documentation). If permissible voltage values or current values are exceeded, the servo amplifiers can be damaged.

Observe electrostatically sensitive components!

The servo amplifiers contain electrostatically sensitive components which may be damaged by incorrect handling. Discharge your body before touching the servo amplifier. Avoid contact with highly insulating materials (artificial fabrics, plastic film etc.). Place the servo amplifier on a conductive surface.

Perform a risk assessment!

The manufacturer of the machine must generate a risk assessment for the machine, and take appropriate measures to ensure that unforeseen movements cannot cause injury or damage to any person or property. Additional requirements on specialist staff may also result from the risk assessment.

Automatic restart

The drive might restart automatically after power on, voltage dip or interruption of the supply voltage, depending on the parameter setting. Risk of death or serious injury for humans working in the machine. If the parameter AENA is set to 1, then place a warning sign to the machine (Warning: Automatic Restart at Power On) and ensure, that power on is not possible, while humans are in a dangerous zone of the machine. In case of using an undervoltage protection device, you must observe EN 60204-1:2006 chapter 7.5.

Specialist staff required!

Only properly qualified personnel are permitted to perform such tasks as transport, assembly, setup and maintenance. Qualified specialist staff are persons who are familiar with the transport, installation, assembly, commissioning and operation of drives and who bring their relevant minimum qualifications to bear on their duties:

Transport :	only by personnel with knowledge of handling electrostatically sensitive components.
Unpacking:	only by electrically qualified personnel.
Installation :	only by electrically qualified personnel.
Setup :	only by qualified personnel with extensive knowledge of electrical engineering and drive technology

The qualified personnel must know and observe IEC 60364 / IEC 60664 and national accident prevention regulations.

Hot surface!

The surfaces of the servo amplifiers can be hot in operation. Risk of minor burns!
The surface temperature can exceed 80°C. Measure the temperature, and wait until the motor has cooled down below 40°C before touching it.

Earthing!

It is vital that you ensure that the servo amplifiers are safely earthed to the PE (protective earth) busbar in the switch cabinet. Risk of electric shock. Without low-resistance earthing no personal protection can be guaranteed and there is a risk of death from electric shock.

High voltages!

The equipment produces high electric voltages up to 900V. During operation, servo amplifiers may have uncovered live sections, according to their level of enclosure protection. Capacitors can have dangerous voltages present up to eight minutes after switching off the supply power. There is a risk of death or severe injury from touching exposed contacts. Do not open or touch the equipment during operation. Keep all covers and cabinet doors closed during operation. Touching the equipment is allowed during installation and commissioning for properly qualified persons only.

There is a danger of electrical arcing when disconnecting connectors, because capacitors can still have dangerous voltages present after switching off the supply power. Risk of burns and blinding. Wait at least eight minutes after disconnecting the servo amplifiers from the main supply power before touching potentially live sections of the equipment (such as contacts) or removing any connections. Always measure the voltage in the DC bus link and wait until the voltage is below 60 V before handling components.

Reinforced Insulation!

Thermal sensors, motor holding brakes and feedback systems built into the connected motor must have reinforced insulation (according to IEC61800-5-1) against system components with power voltage, according to the required application test voltage. All Kollmorgen components meet these requirements.

Never modify the servo amplifiers!

It is not allowed to modify the servo amplifiers without permission by the manufacturer. Opening the housing causes loss of warranty and all certificates become unvalid. Warning signs are added to the device housing. If these signs are damaged, they must be replaced immediately.

2.2 Use as directed

Servo amplifiers are safety components that are built into electrical plant or machines, and can only be operated as integral components of such plant or machines.

The manufacturer of the machine must generate a risk assessment for the machine, and take appropriate measures to ensure that unforeseen movements cannot cause injury or damage to any person or property.

If the servo amplifiers are used in residential areas, in business and commercial areas, or in small industrial operations, then additional filter measures must be implemented by the user.

Cabinet and Wiring

The servo amplifiers must **only** be operated in a closed control cabinet, taking into account the ambient conditions defined on page 31. Ventilation or cooling may be necessary to keep the temperature within the cabinet below 40°C.

Use only copper conductors for wiring. The conductor cross-sections can be derived from the standard IEC 60204 (alternatively for AWG cross-sections: NEC Table 310-16, 60°C or 75°C column).

Power supply

S7xx6 : Servo amplifiers in the S7xx6 series (overvoltage category III acc. to EN 61800-5-1) can be supplied from 1-phase or 3-phase grounded (earthed) industrial supply networks (TN-system, TT-system with grounded neutral point, no more than 42kA symmetrical rated current at $110V_{-10\%}$ to $230V^{+10\%}$).

S7xx0 : Servo amplifiers in the S7xx0 series (overvoltage category III acc. to EN 61800-5-1) can be supplied from 3-phase grounded (earthed) industrial supply networks (TN-system, TT-system with grounded neutral point, no more than 42kA symmetrical rated current at $208V_{-10\%}$, 230V, 240V, 400V or $480V^{+10\%}$).

Periodic overvoltage between phases (L1, L2, L3) and the housing of the servo amplifier must not exceed 1000V crest. In accordance with IEC 61800, voltage spikes (< 50µs) between phases must not exceed 1000V. Voltage spikes (< 50µs) between a phase and the housing must not exceed 2000V.

Motors

The S700 family of servo amplifiers is **exclusively** intended for driving suitable brush less synchronous servomotors, asynchronous motors and DC motors with control of torque, speed and/or position.
The rated voltage of the motors must be at least as high as the DC bus link voltage divided by $\sqrt{2}$ produced by the servo amplifier ($U_{nMotor} \geq U_{DC}/\sqrt{2}$).

Safety

Observe the chapter "use as directed" on page 42 when you use the safety function STO.

To achieve PL e or SIL CL3, the safe switching of the pulse inhibitor must be tested periodically by analyzing the feedback signal from the safety control (⇨ p. 50).

Observe the user documentation for safety cards S1-2(S3) / S2-2(S4) when you use a safety expansion card.

2.3 Prohibited use

Other use than described in chapter 2.2 is not intended and can lead to damage of persons, equipment or things.

The use of the servo amplifier in the following environments is prohibited:
- potentially explosive areas
- environments with corrosive and/or electrically conductive acids, alkaline solutions, oils, vapors, dusts
- directly on non-grounded supply networks or on asymmetrically grounded supplies with a voltage >240V.
- on ships or off-shore applications

Commissioning the servo amplifier is prohibited if the machine in which it was installed,
- does not meet the requirements of the EC Machinery Directive
- does not comply with the EMC Directive or with the Low Voltage Directive
- does not comply with any national directives

The control of holding brakes by the S700 alone may not be used in applications, where functional safety is to be ensured with the brake.

2.4 Handling

2.4.1 Transport

- Transport by qualified personnel in the manufacturer's original recyclable packaging
- Avoid shocks while transporting
- Transport temperature: -25 to +70°C, max. rate of change 20K / hour, class 2K3 acc. to EN61800-2, EN 60721-3-1
- Transport humidity: max. 95% relative humidity, no condensation, class 2K3 acc. to EN61800-2, EN 60721-3-1
- If the packaging is damaged, check the unit for visible damage. In such an event, inform the shipper and the manufacturer.

NOTICE

The servo amplifiers contain electrostatically sensitive components, that can be damaged by incorrect handling. Discharge yourself before touching the servo amplifier. Avoid contact with highly insulating materials, such as artificial fabrics and plastic films. Place the servo amplifier on a conductive surface.

2.4.2 Packaging

- Recyclable cardboard with inserts
- Dimensions: S701...S712 (HxWxD) 125x415x350 mm
  S724 (HxWxD) 155x415x350 mm
- Labeling: name plate on outside of box

2.4.3 Storage

- Storage only in the manufacturer's original recyclable packaging
- Max. stacking height: 8 cartons
- Storage temperature: -25 to +55°C, max. rate of change 20K / hour, class 1K4 acc. to EN61800-2, EN 60721-3-1
- Storage humidity: 5 … 95% relative humidity, no condensation, class 1K3 acc. to EN61800-2, EN 60721-3-1
- Storage duration:
  Less than 1 year: without restriction.
  More than 1 year: capacitors must be **re-formed** before setting up and operating the servo amplifier. To do this, remove all electrical connections and apply single-phase 230V AC for about 30 minutes to the terminals L1 and L2.

2.4.4 Maintenance, Cleaning

The devices do not require any maintenance, opening the devices invalidates warranty.

Cleaning : — if the casing is dirty: clean with Isopropanol or similar
NOTICE: ***Do not immerse or spray***
— Dirt inside the unit: must be cleaned by the manufacturer
— For dirty protective grill on fan: clean with a dry brush

2.4.5 Disassembling

Observe the sequence below, if a servo amplifier has to be disassembled (e.g. for replacement).

1. Electrical disconnection

a. Switch off the main switch of the switchgear cabinet and the fuses that supply the system.
b. Warning: Contacts can still have dangerous voltages present up to 8 min after switching off mains voltage. Risk of electric shock! Wait at least eight minutes after disconnecting the servo amplifier from the main supply power before touching potentially live sections of the equipment (e.g. contacts) or undoing any connections. To be sure, measure the voltage in the DC Bus link and wait until it has fallen below 60V.
c. Remove the connectors. Disconnect the earth (ground) connection at last.

2. Check temperature

Caution

During operation the heat sink of the servo amplifier may reach temperatures above 80°C (176°F). Risk of minor burns! Before touching the device, check the temperature and wait until it has cooled down below 40°C (104°F).

3. Disassembling

Remove the fan housing and disassemble the servo amplifier (reverse of the procedure described in chapter "Mechanical installation).

2.4.6 Repair

Repair of the servo amplifier must be done by the manufacturer. Opening the devices means loss of the guarantee. Use the telefax form on page 163 for repair request. You'll receive the current dispatch information.

Disassemble the equipment as described in chapter 2.4.5 and send it in the original packaging to the address given in the dispatch information.

2.4.7 Disposal

In accordance to the WEEE-2002/96/EC-Guidelines we take old devices and accessories back for professional disposal. Transport costs are the responsibility of the sender. Use the telefax form on page 163 for disposal request. You'll receive the current dispatch information.

Disassemble the equipment as described in chapter 2.4.5 and send it in the original packaging to the address given in the dispatch information.

This page has been deliberately left blank.

3 Approvals

Certificates can be found in our Product WIKI on page Approvals.

3.1 Conformance with UL

The S7xx0 servo amplifiers are listed under UL file number **E217428**.
The S7xx6 servo amplifiers are **not listed** under UL.

UL-certified servo amplifiers (Underwriters Laboratories Inc.) fulfil the relevant U.S. standards (in this case UL 840 and UL 508C). The UL certification relates only to the mechanical and electrical construction design of the device. This standard describes the fulfillment by design of minimum requirements for electrically operated power conversion equipment, such as frequency converters and servo amplifiers, which is intended to eliminate the risk of fire, electric shock, or injury to persons, being caused by such equipment. The technical conformance with the U.S. standard is determined by an independent UL inspector through the type testing and regular checkups. Apart from the notes on installation and safety in the documentation, the customer does not have to observe any other points in direct connection with the UL-certification of the equipment.

UL 508C: UL 508C describes the fulfillment by design of minimum requirements for electrically operated power conversion equipment, such as frequency converters and servo amplifiers, which is intended to eliminate the risk of fire being caused by such equipment.

UL 840: UL 840 describes the fulfillment by design of air and insulation creepage spacings for electrical equipment and printed circuit boards.

UL Markings

- Use 60°C or 75°C copper wire only for every model of this section.
- Use Class 1 wire only.
- Tightening torque for field wiring terminals:
  X0, X8, X9: 0.7 - 0.8Nm (6.20 to 7.08 lbf in)
- Use in a pollution degree 2 environment.
- These devices provide solid state motor overload protection at 130% of full load current.
- Integral solid state short circuit protection does not provide branch circuit protection. Branch circuit protection must be provided in accordance with the National Electrical Code and any additional local codes.
- These devices are not provided with motor over-temperature sensing.
- Suitable for use on a circuit capable of delivering not more than 42kA rms symmetrical amperes for a max. voltage of 480 Vac.
- Supply circuit protection:

Model	Fuse class	Rating	Max. Fuse Rating
S7010	RK5, CC, J, T	600VAC 200kA	6A (Time-Delay)
S7030	RK5, CC, J, T	600VAC 200kA	6A (Time-Delay)
S7060	RK5, CC, J, T	600VAC 200kA	10A (Time-Delay)
S7120	RK5, CC, J, T	600VAC 200kA	15A (Time-Delay)
S7240	RK5, CC, J, T	600VAC 200kA	30A (Time-Delay)

- The drives may be connected together via the “common bus” (DC bus link) based on the instructions on p. 70ff. The devices may also be grouped from the AC input side based on the max. input fuse (e.g. 3 pcs. S7010 with one common 6A fuse in line).

3.2 CE conformance

Conformance with the EC Machine Directive 2006/42/EC, the EC EMC Directive 2004/108/EC and the Low Voltage Directive 2006/95/EC is mandatory for the supply of servo amplifiers within the European Community.

The servo amplifier meets the noise immunity requirements to the 2nd environmental category (industrial environment). For noise emission the amplifier meets the requirement to a product of the category C2 (motor cable ≤ 10m).

NOTICE This product can cause high-frequency interferences in non industrial environments. This can require measures for interference suppression like additional external EMC filters.

With a motor cable length of 10m or longer, the servo amplifier meets the requirement to the category C3.

The servo amplifiers have been tested by an authorized testing laboratory in a defined configuration, using the system components that are described in this documentation. Any divergence from the configuration and installation described in this documentation means that you will be responsible for carrying out new measurements to ensure conformance with regulatory requirements.

3.2.1 European Directives and Standards for the machine builder

Servo amplifiers are safety components that are intended to be incorporated into electrical plant and machines for industrial use. When the servo amplifiers are built into machines or plant, the amplifier must not be used until it has been established that the machine or equipment fulfills the requirements of the

- EC Machinery Directive (2006/42/EC)
- EC EMC Directive (2004/108/EC)
- EC Low Voltage Directive (2006/95/EC)

Standards to be applied for conformance with the EC Machinery Directive (2006/42/EC)

IEC 60204-1 (Safety and Electrical Equipment in Machines)
ISO 12100 (Safety of Machines)

NOTICE The manufacturer of the machine must generate a risk assessment for the machine, and must implement appropriate measures to ensure that unforeseen movements cannot cause injury or damage to any person or property.
The machine manufacturer must check whether other standards or EC Directives must be applied to the machine.

Standards to be applied for conformance with the EC Low Voltage Directive(2006/95/EC)

IEC 60204-1 (Safety and Electrical Equipment in Machines)
IEC 60439-1 (Low-voltage switchgear and controller assemblies)

Standards to be applied for conformance with the EC EMC Directive (2004/108/EC)

IEC 61000-6-1 / 2 (Interference Immunity in Residential & Industrial Areas)
IEC 61000-6-3 / 4 (Interference Generation in Residential & Industrial Areas)

The manufacturer of the machine is responsible for ensuring that it meets the limits required by the EMC regulations. Advice on the correct installation for EMC can be found in this documentation.

We only guarantee the conformance of the servo system with the standards cited in this chapter if the components (motor, cables, chokes etc.) are those supplied by us.

3.2.2 CE Declaration of Conformity

EC Declaration of Conformity

KOLLMORGEN

Document No.: GL-11/24/14/13

We, the company

KOLLMORGEN Europe GmbH
Pempelfurtstraße 1
D-40880 Ratingen

hereby in sole responsibility declare the conformity of the product series

Servo drive S700 (types S701xy, S703xy, S706xy, S712xy, S724xy with x=0,6 and y=1,2,E,F,P,S,G,H)

with the following directives:

- EC Directive 2006/42/EG
  Directive for machinery
  Used harmonized standards
  EN 61800-5-2 (2007)
  EN ISO 13849-1 (2008)
  EN ISO 13849-2 (2012)

- EC Directive 2004/108/EC
  Electromagnetic compatibility
  Used harmonized standard EN61800-3 (2004)

- EC Directive 2006/95/EC
  Electrical devices for use in special voltage limits
  Used harmonized standard EN61800-5-1 (2007)

Year of EC-Declaration 2007

Issued by: Product Manager Drives Europe
Dr. Arne Linder
Ratingen, 02.04.2013

Legally valid signature

The above-mentioned company has the following technical documentation for examination:
- Proper operating instructions
- Setup Software
- Diagrams / software source codes (for EU authority only)
- Test certificates (for EU authority only)
- Other technical documentation (for EU authority only)

The special technical product documentation has been created.
Responsible person for documentation:
Lars Lindner, Kollmorgen Europe GmbH, Ratingen, Germany, Phone: +49(0)2102/9394-0

3.3 GOST-R conformance

Certificate for servo amplifier and accessories (cover page, page 1 of 3).

СИСТЕМА СЕРТИФИКАЦИИ ГОСТ Р

ФЕДЕРАЛЬНОЕ АГЕНТСТВО ПО ТЕХНИЧЕСКОМУ РЕГУЛИРОВАНИЮ И МЕТРОЛОГИИ

Добровольная сертификация

СЕРТИФИКАТ СООТВЕТСТВИЯ

№ РОСС DE.АГ26.Н00028

Срок действия с 04.07.2011 по 03.07.2014

№ 0630022

ОРГАН ПО СЕРТИФИКАЦИИ

РОСС RU.0001.11АГ26

"РЕГИОНАЛЬНЫЙ ЦЕНТР СЕРТИФИКАЦИИ, ЭКСПЕРТИЗЫ И ДЕКЛАРИРОВАНИЯ"

121099, г.Москва, Новинский бульвар, д.8. тел. (495) 792-99-80 доп.130

ПРОДУКЦИЯ

преобразователи частоты (сервоусилители) серий Servostar 6xx-yy, Servostar S40zy-yy, S3xxxx-yy, S7xxxx-yyyzyz-yz и AKD-P0xx0x-NAyy-yxxx с комплектующими согласно приложению к сертификату на двух листах, бланки № 0473018 - № 0473019, серийный выпуск

код ОК 005 (ОКП): 340000

СООТВЕТСТВУЕТ ТРЕБОВАНИЯМ НОРМАТИВНЫХ ДОКУМЕНТОВ

ГОСТ 12.2.007.0-75, ГОСТ 12.2.007.11-75, ГОСТ 26830-86

код ТН ВЭД России: 8504

ИЗГОТОВИТЕЛЬ

"Kollmorgen Europe GmbH", Pempelfurtstr. 1, 40880 Ratingen, Германия

(Заводы изготовители согласно приложению к сертификату.)

СЕРТИФИКАТ ВЫДАН

"Kollmorgen Europe GmbH",

Pempelfurtstr. 1, 40880 Ratingen, Германия

НА ОСНОВАНИИ

протокола испытаний ИЛЭ ОАО "ВНИИС"

(аттестат аккредитации РОСС RU.0001.21МЛ55)

№ 215/11 от 22.06.2011г.

ДОПОЛНИТЕЛЬНАЯ ИНФОРМАЦИЯ

Схема сертификации 3. Продукция маркируется знаком соответствия. Форма и размеры знака по ГОСТ Р 50460-92. Сертификат без приложений не действителен.

Руководитель органа (подпись) Б.А.Третьяков (инициалы, фамилия)

Эксперт (подпись) С.Н.Абрамова (инициалы, фамилия)

Сертификат не применяется при обязательной сертификации

3.4 Functional Safety

3.4.1 Safety Certificate S700

Cover page, page 1 of 2.

ZERTIFIKAT ◆ CERTIFICATE ◆ 認証証書 ◆ СЕРТИФИКАТ ◆ CERTIFICADO ◆ CERTIFICAT

CERTIFICATE

No. Z10 11 07 75872 002

Holder of Certificate: **Kollmorgen Europe GmbH**
Pempelfurtstr. 1
40880 Ratingen
GERMANY

Factory(ies): 20132, 72254

Certification Mark:

Product: **AC Servo Systems**

Model(s): **S700 Series**
For nomenclature see attachment

Parameters:

Supply voltage AC:	3* 208 - 480 VAC or 110 - 230 VAC
Power output:	1.1 kVA – 50 kVA
Safety Parameters	SIL 3 (EN 61508) PL e, Cat 4 (EN ISO 13849-1) SIL CL 3 (EN 62061)

Tested according to:
2006/42/EC
EN 61326-3-1:2008
EN 61800-3:2004
EN 61800-5-2:2007
EN 61508-1:2001
EN 61508-2:2001
EN 61508-3:2001
EN 61508-4:2001
EN ISO 13849-1:2008
EN 62061:2005

The product was tested on a voluntary basis and complies with the essential requirements. The certification mark shown above can be affixed on the product. It is not permitted to alter the certification mark in any way. In addition the certification holder must not transfer the certificate to third parties. See also notes overleaf.

Test report no.: 717502561

Valid until: 2016-08-01

Date, 2011-08-11 (Jürgen Blum)

Page 1 of 2

472080

TÜV SÜD Product Service GmbH · Zertifizierstelle · Ridlerstraße 65 · 80339 München · Germany

TÜV®

A1 / 12.09

3.4.2 Safety Certificate S700 with Safety Card

Cover page, page 1 of 2.

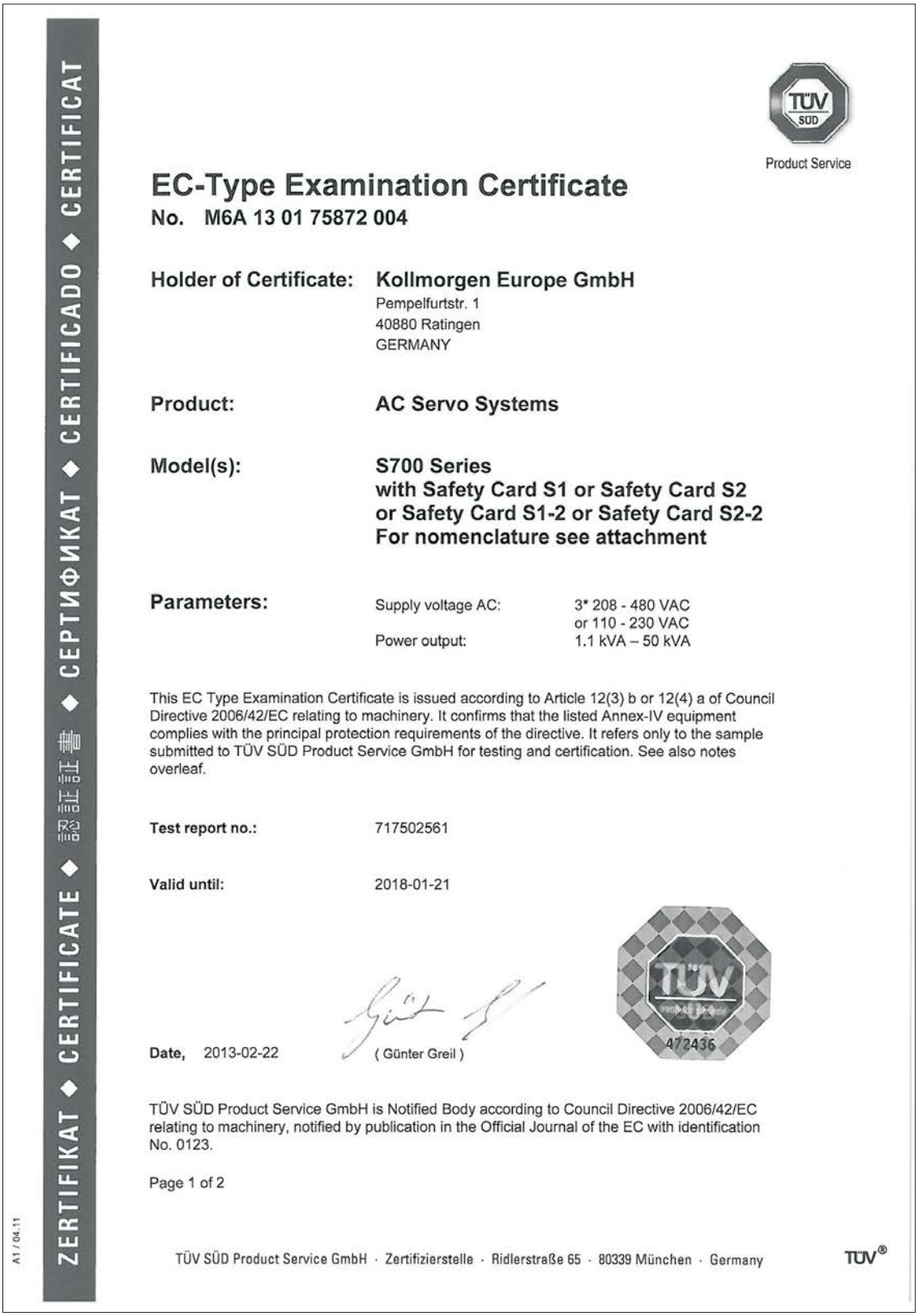

ZERTIFIKAT ◆ CERTIFICATE ◆ 認証証書 ◆ СЕРТИФИКАТ ◆ CERTIFICADO ◆ CERTIFICAT

A1 / 04.11

TÜV SÜD
Product Service

EC-Type Examination Certificate

No. M6A 13 01 75872 004

Holder of Certificate: **Kollmorgen Europe GmbH**
Pempelfurtstr. 1
40880 Ratingen
GERMANY

Product: **AC Servo Systems**

Model(s): **S700 Series**
with Safety Card S1 or Safety Card S2
or Safety Card S1-2 or Safety Card S2-2
For nomenclature see attachment

Parameters:

Supply voltage AC:	3* 208 - 480 VAC or 110 - 230 VAC
Power output:	1.1 kVA – 50 kVA

This EC Type Examination Certificate is issued according to Article 12(3) b or 12(4) a of Council Directive 2006/42/EC relating to machinery. It confirms that the listed Annex-IV equipment complies with the principal protection requirements of the directive. It refers only to the sample submitted to TÜV SÜD Product Service GmbH for testing and certification. See also notes overleaf.

Test report no.: 717502561

Valid until: 2018-01-21

Date, 2013-02-22 (Günter Greil)

TÜV 472436

TÜV SÜD Product Service GmbH is Notified Body according to Council Directive 2006/42/EC relating to machinery, notified by publication in the Official Journal of the EC with identification No. 0123.

Page 1 of 2

TÜV SÜD Product Service GmbH · Zertifizierstelle · Ridlerstraße 65 · 80339 München · Germany TÜV®

4 Package

4.1 Package supplied

When an amplifier from the S700 series is ordered (order numbers ⇨p.161), the following is supplied:

— Servo amplifier S700
— Instruction Manual S700
— Operating Manual Safety Expansion Card Sx (in case of a built-in safety card)
— Online documentation and setup software on CD-ROM
— Mating connectors X0, X3A, X3B, X4A, X4B, X8

NOTE The mating SubD connectors are not part of the package!

Accessories : (must be ordered separately, if required; description see accessories manual)

— Motor cable (prefabricated) with special shield clamp, or both power connectors separately, with the motor cable as a cut-off length
— Feedback cable (prefabricated)
or both feedback connectors separately, with the feedback cable as a cut-off length
— Motor choke 3YL or 3YLN, for motor cables longer than 25 meters
— External brake resistor BAR(U), Capacitor Modul KCM-x
— Communication cable to the PC (⇨ p.102) for setting parameters from a PC
— Power cable, control cables, fieldbus cables (as cut-off lengths)

4.2 Nameplate

The nameplate depicted below is attached to the side of the servo amplifier.
The information described below is printed in the individual fields.

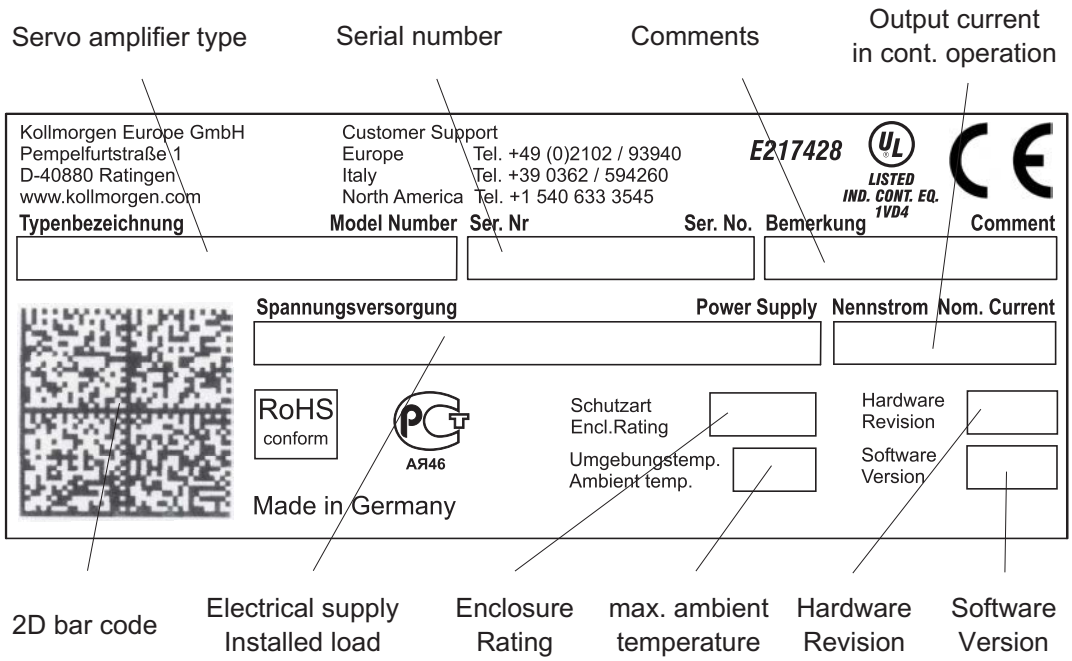

4.3 Part number scheme

The part number is identical with the order code.

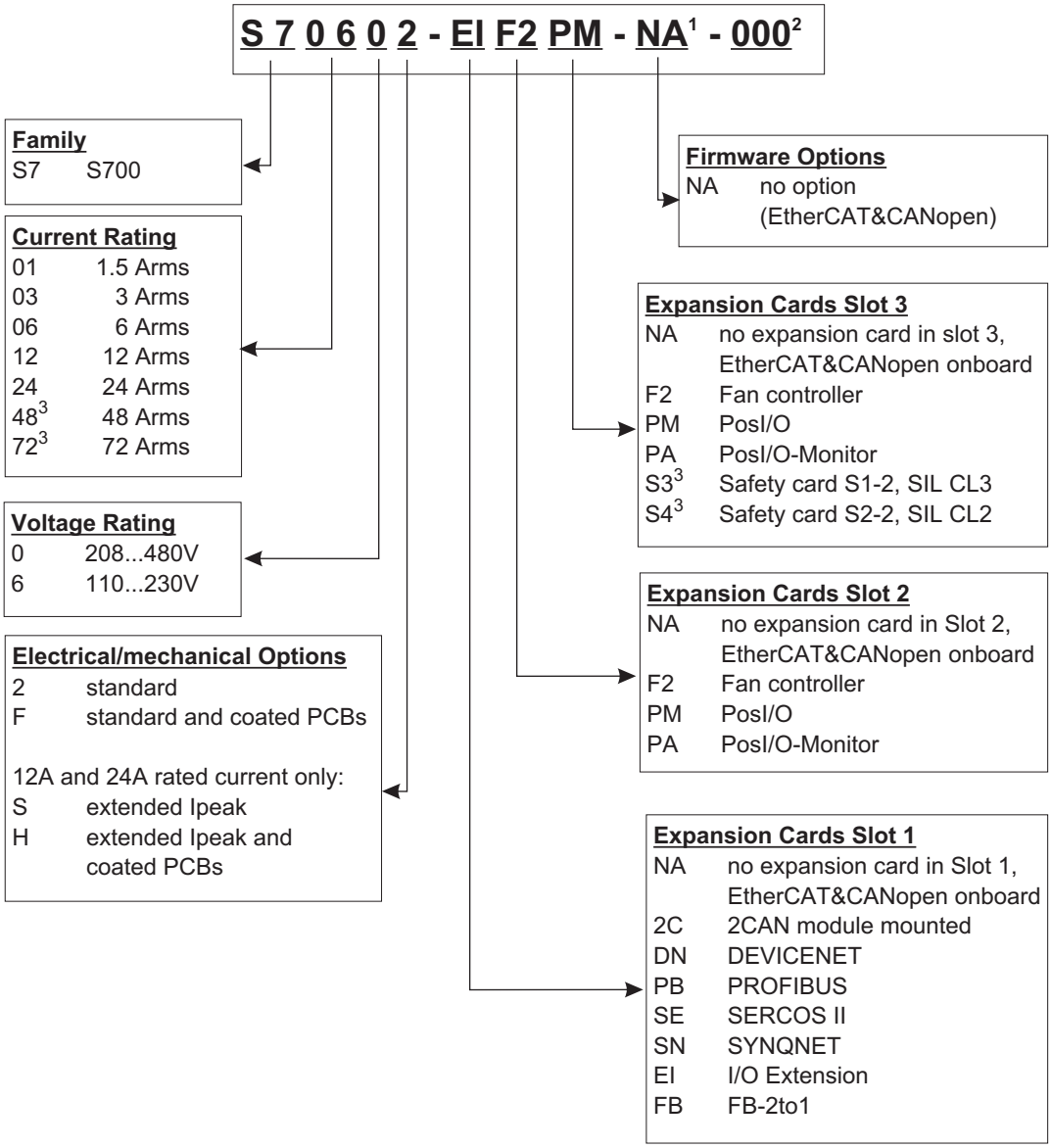

1 is void with standard

2 additional coding defines customer specific specials.

3 described in seperate documentation

Example 1: S70602-EIF2PM-NA-000

S7	S700
06	6A rated current
0	208...480V rated voltage
2	no electr./mech. option
EI	I/O expansion card in Slot 1
F2	Expansion card Controlled Fan in Slot 2
PM	PosI/O expansion card in Slot 3
NA	Standard (EtherCAT&CANopen onboard)
000	no customer specific specials

Example 2: S7126S-EIF2S4-NA-000

S7	S700
12	12A rated current
6	110...230V rated voltage
S	extended Ipeak (30A)
EI	I/O Erweiterungskarte in Slot 1
F2	Expansion card Controlled Fan in Slot 2
S4	Safety Card S2-2 in Slot 3
NA	Standard (EtherCAT&CANopen onboard)
000	no customer specific specials

5 Technical description

5.1 The S700 family of digital servo amplifiers

Standard version

- Large supply voltage range: 1 x 110V$_{-10\%}$ … 3 x 480V$^{+\ 10\%}$
- Overvoltage category III acc. to IEC 61800-5-1
- 2 housing dimensions: S701...S712 70 mm
  S724 100 mm
- CANopen onboard
- EtherCAT onboard
- RS232 and 24V pulse direction interface onboard
- Resolver-, Encoder-, AquadB Encoder-, ComCoder- evaluation onboard
- Position controller onboard
- Safe Stop STO onboard (up to SIL CL3, PLe)
- 3 frontside slots for expansion cards
- Memory Card slot onboard
- Synchronous servomotors, linear motors, asynchronous motors and DC motors can be used

Power section

- S7xx6: Directly on grounded mains supply, 1x110V$_{-10\%}$ … 3x230V$^{+10\%}$, 50/60Hz
  S7xx0: Directly on grounded mains supply, 3x208V$_{-10\%}$ … 3x480V$^{+10\%}$, 50/60Hz
- TN-network or TT-network with grounded neutral point, 42kA max. symmetrical current rating, connection to other supply types only via isolating transformer,⇨p.66
- B6 bridge rectifier, integral supply filter and soft-start circuit
- Fusing (e.g. fusible cutout) to be provided by the user
- Shielding All shielding connections are made directly on the amplifier
- Output stage IGBT module with floating current measurement
- Brake circuit with dynamic distribution of the generated power between several amplifiers on the same DC bus link circuit. Internal brake resistor as standard, external brake resistors if required.
- DC bus link voltage 135...900 V DC, can be connected in parallel.
- Interference suppression filters are integrated for the electrical supply feed and the 24V auxiliary supply voltage (with motor cable ≤ 10m for C2 as per IEC 61800-3, with motor cable > 10m for C3 as per IEC 61800-3).

Integrated safety

- Appropriate insulation and creepage distances and electrical isolation ensure safe electrical separation, as per IEC 61800-5-1, between the power input / motor connections and the signal electronics.
- Soft-start, overvoltage detection, short-circuit protection, phase-failure monitoring.
- Temperature monitoring of the servo amplifier and motor (if our motors and prefabricated cables are used).
- Safe stop (up to SILCL3 acc. to IEC 62061, PLe acc. to ISO13849-1) ⇨ p.41.
- Slot for safety card with more safety functions for the safe drive operation, ⇨ p.152

Auxiliary supply voltage 24V DC

- Electrically isolated, internal fusing (amplifier and fan/brake separated), from an external 24V DC power supply unit.
- Separate 24V supply input for digital outputs

Operation and parameter setting

- With our user-friendly setup software DRIVEGUI.EXE, for setup via the serial interface of a PC.
- If no PC is available: direct operation by two keys on the servo amplifier and a 3-character LED display.
- Fully programmable via RS232 interface.
- Read and write access to parameter records and firmware via smartcard.

Completely digital control

- Digital current controller (space vector, pulse-width modulation, 62.5 µs)
- Adjustable digital speed controller (62.5 µs)
- Integrated position controller, with adaptation possibilities for all applications (250 µs, optionally 125 µs)
- Integrated 24V step/direction interface for connecting a servomotor to a stepper controller

Inputs and Outputs

- 2 programmable analog inputs ⇨ p. 98
- 4 programmable digital inputs ⇨ p. 99
- 2 programmable digital inputs/outputs (direction selectable) ⇨ p. 101
- Programmable logical combinations of digital signals
- 1 input Enable ⇨ p. 100
- 2 inputs STO Enable ⇨ p. 99

Expansions

Slot 1

Expansion cards in slot 1 can be combined with F2 Option in slot 2. More combinations of slot 1 and slot 2 expansion cards are not possible.

- I/O-14/08 expansion card, ⇨ p. 126
- PROFIBUS expansion card, ⇨ p. 129
- sercos® II expansion card, ⇨ p. 130
- DeviceNet expansion card, ⇨ p. 132
- SynqNet expansion card, ⇨ p. 135
- FB-2to1 expansion card, ⇨ p. 137
- -2CAN- expansion module, separated connectors for CAN bus and RS232 ⇨ p. 139

Slot 2

- PosI/O expansion card, ⇨ p. 142
- PosI/O-Monitor expansion card, ⇨ p. 142
- F2 Option, controlled fan, later insertion not possible, ⇨ p. 141, can be combined with expansion cards in slot 1.

Slot 3

- PosI/O expansion card, ⇨ p. 151
- PosI/O-Monitor expansion card, ⇨ p. 151
- F2 Option, controlled fan, later insertion not possible, ⇨ p. 151
- Safety expansion card (S3) S1-2 (SIL CL3), ⇨ p. 155
- Safety expansion card (S4) S2-2 (SIL CL2), ⇨ p. 152

Several third-party expansion cards (ModBus, LightBus, FIP-IO etc. please contact the manufacturer for further information)

Macro programming

More information can be found in our Technical WIKI (www.wiki-kollmorgen.eu).

- 62.5µs / 250µs / 1ms / 4ms / 16ms / IDLE / IRQ
- 128 kByte memory
- IEC 61131 structured text
- 400 easy instructions every 62.5 µs
- CAN objects for multi axis control

5.2 Technical data

5.2.1 Rated data S7xx0

Electrical data	DIM	S70102	S70302	S70602	S71202/ S7120S	S72402/ S7240S
Rated supply voltage (grounded supply, phase to phase)	V~	3 x 208V$_{-10\%}$ … 3 x 480V$^{+10\%}$, 50/60 Hz				
Rated input power for cont. operation	kVA	1.1	2.2	4.5	9	18
Permitted switch on/off frequency	1/h	30				
Auxiliary voltage supply	—	⇨ p.30				
Maximum DC bus link voltage	V=	900				
Rated output current (rms value, ± 3%)						
at 3x208V	Arms	2.5	5	6	12	24
at 3x230V	Arms	2	4	6	12	24
at 3x400V	Arms	1.5	3	6	12	24
at 3x480V	Arms	1.5	3	6	12	24
Peak output current (for approx.2s, ± 3%)	Arms	4,5	9	18	24/30	48/72
Peak output current (for approx.5s, ± 3%)	Arms	3	6	12	24	48
Switching frequency of output stage	kHz	8				
Voltage rise speed dU/dt, (measured without connected motor, see hints on page 74!)						
at 3x208V	kV/µs	3.0				
at 3x230V	kV/µs	3.3				
at 3x400V	kV/µs	5.7				
at 3x480V	kV/µs	6.9				
Technical data for brake circuit	—	⇨ p.34				
Threshold for overvoltage switch-off	VDC	⇨ p.34				
Motor inductance min.						
at 3x208V	mH	7.7	3.9	1.9	1.2	0.7
at 3x230V	mH	8.5	4.3	2.1	1.3	0.8
at 3x400V	mH	14.8	7.4	3.7	2.2	1.4
at 3x480V	mH	17.8	8.9	4.4	2.7	1.7
Motor inductance max.	mH	Consult our customer support				
Form factor of the output current (rated conditions, min. load inductance)	—	1.01				
Bandwidth of current controller	kHz	> 1,2 (bis 5)				
Residual voltage drop at rated current	V	4				6
Thermal dissipation, output stage disabled	W	max. 20				max.25
Thermal dissipation at rated current (incl. PSU losses, without brake dissipation)	W	40	70	100	160	330
Noise emission max.	dB(A)	43	43	58	65	65
Mechanical data						
Weight	kg	4.4				5.5
Height, without connectors	mm	345				348
Height, with connectors	mm	379				382
Width	mm	70				100
Depth, without connectors	mm	243				243
Depth, with connectors	mm	285				285

5.2.2 Rated data S7xx6

Electrical data	DIM	S7016 2	S7036 2	S7066 2	S7126 2	S7126 S	S7246 2	S7246 S
Rated supply voltage (grounded supply, phase to phase)	V~	1 x 110V$_{-10\%}$ … 3 x 230V$^{+10\%}$, 50/60 Hz						
Rated input power for cont. operation	kVA	1	2	2,3	4,5	4,5	9	9
Permitted switch on/off frequency	1/h	30						
Auxiliary voltage supply	—	⇨ p.30						
Maximum DC bus link voltage	V=	455						
Rated output current (rms value, ± 3%)								
at 1x110V (1~)	Arms	1,5	3	6	7	7	10	10
at 1x230V (1~)	Arms	1,5	3	6	8	8	11	11
at 3x110V (3~)	Arms	2,5	5	6	12	12	24	24
at 3x230V (3~)	Arms	2,5	5	6	12	12	24	24
Peak output current (rms value, ±3%)								
at 1x110V (1~), for 2s / 5s	Arms	3/3	3/3	6/6	7/7	7/7	10/10	10/10
at 1x230V (1~), for 2s / 5s	Arms	4,5/3	9/6	12/12	12/12	12/12	13/13	13/13
at 3x110V (3~), for 2s / 5s	Arms	4,5/3	9/6	18/12	24/24	30/24	48/48	72/48
at 3x230V (3~), for 2s / 5s	Arms	4,5/3	9/6	18/12	24/24	30/24	48/48	72/48
Switching frequency of output stage	kHz	8						
Voltage rise speed dU/dt, (measured without connected motor)								
at 1x110V	kV/µs	2						
at 1x230V	kV/µs	3,3						
at 3x110V	kV/µs	2						
at 3x230V	kV/µs	3,3						
Technical data for brake circuit	—	⇨ p.35						
Threshold for overvoltage switch-off	VDC	⇨ p.35						
Motor inductance min.								
at 1x110V	mH	5,7	5,7	2,9	2,5	2,5	1,7	1,7
at 1x230V	mH	8	4	3	3	3	2,8	2,8
at 3x110V	mH	3,8	1,9	0,96	0,72	0,57	0,36	0,24
at 3x230V	mH	8	4	2	1,5	1,2	0,75	0,5
Motor inductance max.	mH	Contact our customer support						
Form factor of the output current (rated conditions, min. load inductance)	—	1.01						
Bandwidth of current controller	kHz	> 1,2 (bis 5)						
Residual voltage drop at rated current	V	4					6	
Thermal dissipation, output stage disabled	W	max. 20					max.25	
Thermal dissipation at rated current (incl. PSU losses, without brake dissipation)	W	30	45	60	90	90	175	175
Noise emission max.	dB(A)	43	43	58	65	65	65	65
Mechanical data								
Weight	kg	4,4					5,5	
Height, without connectors	mm	345					348	
Height, with connectors	mm	379					382	
Width	mm	70					100	
Depth, without connectors	mm	243					243	
Depth, with connectors	mm	285					285	

5.2.3 Inputs, outputs, aux. voltage supply

Interface	electr. data
Analog inputs 1 and2	±10V
Max. common-mode voltage	±10V
Digital control inputs	as per IEC 61131-2 type1, max. 30VDC, 15mA
Digital control outputs	as per IEC 61131-2 type1, max. 30VDC, 100mA
BTB/RTO output, relay contacts	max. 30VDC, max 42VAC
	500mA
24V-IO for digital outputs	20V - 30V
Auxiliary supply voltage, electrically isolated	24V (-0% +15%)
current without / with motor brake	1A / 3A
Min./max. output current to brake	0.15A / 2A

5.2.4 Connectors

Connector	Type	max. cross section*1	permiss. current*2	permiss. voltage*3
Control signals X3A,B,C	Mini-Combicon connector	1,5mm²	4A	160V
Aux. voltage X4A,B	Mini-Combicon connector	1,5mm²	4A	160V
Power signals X0, X8, X9	Power-Combicon connector	6mm²	24A	1000V
Resolver input X2	SubD 9pin (socket)	0,5mm²	1A	<100V
Encoder input X1	SubD15pin (socket)	0,5mm²	1A	<100V
PC interface, CAN X6	SubD 9pin (plug)	0,5mm²	1A	<100V
Encoder-Emulation, ROD/SSI X5 (optional)	SubD 9pin (plug)	0,5mm²	1A	<100V

*1 single-line connection
*2 single-line connection with recommended conductor cross section (chapter 5.2.8)
*3 rated voltage with pollution level 2

5.2.5 Recommended tightening torques

Connector	Tightening torque
X0, X8, X9	0.7 to 0.8 Nm
Grounding bolt	3.5 Nm

5.2.6 Fusing

Internal fusing, wire fuse or electronic

Circuit	Internal fuse
Auxiliary voltage 24V	4 A / 4 A
Brake resistor	electronic
STO-Enable	2 A

External fusing by user (US fuses in brackets)

Wire fuses or similar		S701 / S703	S706	S712	S724
AC supply feed	$F_{N1/2/3}$	6 AT (6A)*	10 AT (10A)*	16 AT (15A)*	30/35 AT (30A)*
24V feed	$F_{H1/2}$	max. 8 AT (8A)			
Brake resistor	$F_{B1/2}$	40 A**	40 A**	40 A**	50 A**

* EU fuses: types gRL or gL, 400V/500V, T means time-delay
US fuses: class RK5 or CC or J or T, 600VAC 200kA, time-delay
** Bussmann FWP-xx
Tips and detailed information can be found in the Product-Wiki on page "Fuses"

5.2.7 Ambient conditions, ventilation, mounting position

Storage hints	⇨ p.13
Transport hints	⇨ p.13
Ambient temperature in operation	0...+40°C under rated conditions +40...+55°C with power derating 2.5% / °C
Humidity in operation	rel. humidity 85%, no condensation
Site altitude	up to 1000 meters a.m.s.l. without restriction 1000…2500 meters a.m.s.l. with power derating 1.5% / 100meters
Pollution level	Pollution level 2 as per IEC 60664-1
Vibrations	Class 3M1 according to IEC 60721-3-3
Enclosure protection	IP 20 according to IEC 60529
Mounting position	vertical ⇨ p.54
Ventilation	built-on fan

NOTICE

The servo amplifier shuts down (error F01 and F13, see p.122, motor has no torque) in case of excessively high temperature in the control cabinet.
Make sure that there is sufficient forced ventilation within the control cabinet.

5.2.8 Conductor cross-sections

Following IEC 60204, we recommend for **single-axis systems**:

Interface	Cross section	Techn. requirements
AC connection	S701...706: 1.5 mm² (16awg) S712: 2.5 mm² (14awg) S724: 4 mm² (12awg)	600V,80°C
DC bus link Brake resistor	S701...724: 6 mm² (10awg)	1000V, 80°C, shielded for lengths >0.20m
Motor cables without choke, max. 25 m	S701...706: 1...1.5 mm² (16awg) S712: 2.5 mm² (14awg) S724: 4 mm² (12awg)	600V,80°C, shielded, capacitance <150pF/m
Motor cables with choke 3YL or 3YLN, 25 - 50m*	S701...706: 1 mm² (16awg) S712: 2.5 mm² (14awg) S724: 4 mm² (12awg)	600V,80°C, shielded, capacitance <150pF/m
Resolver, motor thermal control, max.100m*	4x2x0.25 mm² (24awg)	twisted pairs, shielded, capacitance <120pF/m
Encoder, motor thermal control, max. 50m*	7x2x0.25 mm² (24awg)	twisted pairs, shielded, capacitance <120pF/m
ComCoder, motor thermal control, max. 25m	8x2x0.25 mm² (24awg)	twisted pairs, shielded, capacitance <120pF/m
Setpoints, AGND, max 30m	0.25 mm² (24awg)	twisted pairs, shielded
Control signals, BTB, DGND, max 30m	0.5 mm² (21awg)	
Holding brake (motor)	min. 0.75 mm² (19awg)	600V, 80°C, shielded, **check voltage drop**
+24 V and XGND, max 30m	max. 2.5 mm² (14awg)	**check voltage drop**

NOTICE

For multi-axis systems, observe the specific operating conditions for your system.
To reach functional safety with the max. permitted cable length, observe cable requirements ⇨ p. 61.

* Kollmorgen North America supplies cables up to 39 meters
Kollmorgen Europe supplies cables up to max. length

5.3 Motor holding brake

A 24V / max. 2A holding brake in the motor can be controlled directly by the amplifier.

CAUTION

This function does not ensure functional safety! Danger by falling load (in case of suspended load, vertical axes). An additional mechanical brake is required for funktional safety, which must be safely operated, e.g. via the Safety Card S1-2 (see p.155).

NOTICE

The brake only works with sufficient voltage level (⇨ p.30). Check voltage drop, measure the voltage at brake input and check brake function (brake and no brake).

The brake function must be enabled through the BRAKE setting (screen page: Motor). In the diagram below you can see the timing and functional relationships between the ENABLE signal, speed setpoint, speed and braking force. All values can be adjusted with parameters, the values in the diagram are default values.

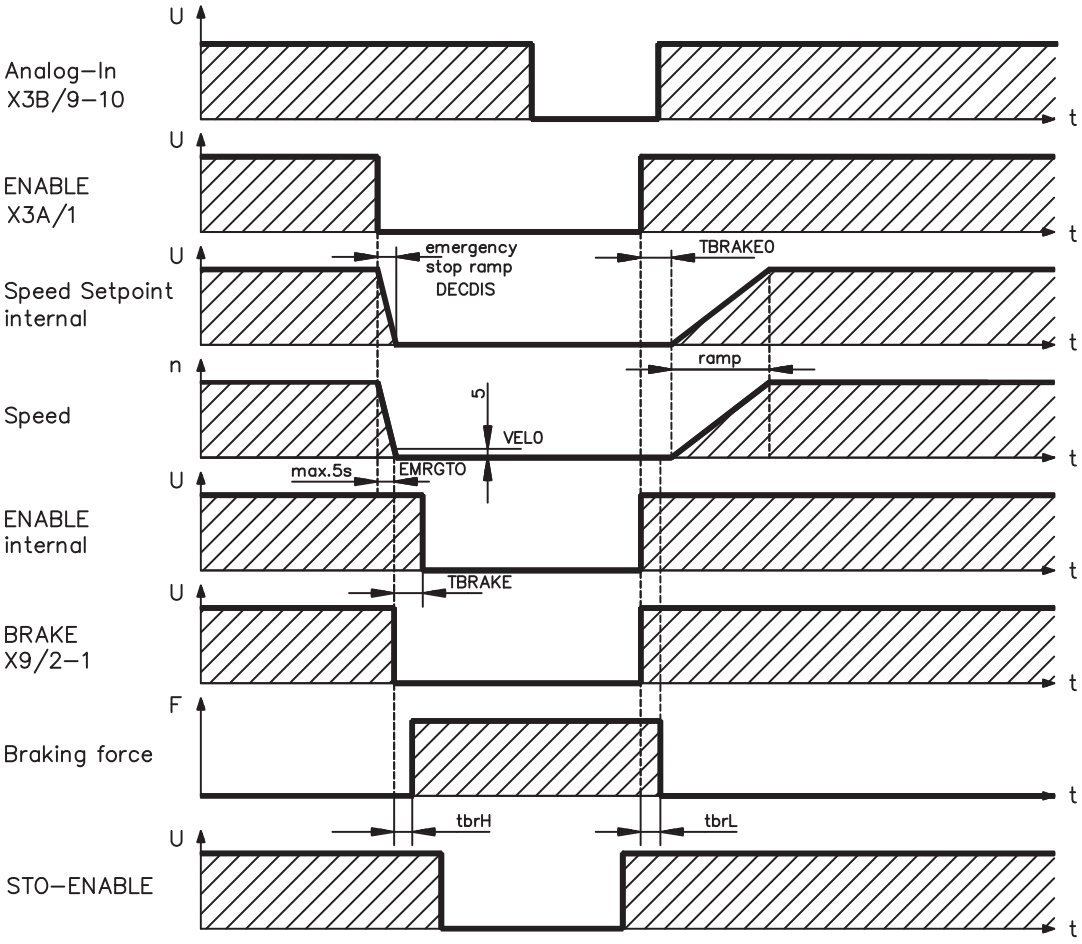

During the internal ENABLE delay time of 100ms (DECDIS), the speed setpoint of the servo amplifier is internally driven down along an adjustable ramp to 0V. The output for the brake is switched on when the speed has reached 5 rpm (VELO), at the latest after 5s (EMRGTO). The release delay time (t_{brH}) and the engage delay time (t_{brL}) of the holding brake that is built into the motor are different for the various types of motor (see motor manual), the matching data are loaded from the motor database when the motor is selected. A description of the interface can be found on page 74.

5.4 LED display

A 3-character LED display indicates the status of the amplifier after switching on the 24V supply (⇨ p.121). When the keys on the front panel are used, the parameter and function numbers are shown, as well as the numbers for any errors and warnings that may occur (⇨ p.122ff).

5.5 Grounding system

AGND — analog inputs, internal analog ground
DGND — 24V-IO, digital inputs and digital outputs, optically isolated.
GND — internal digital ground, encoder Emulation, RS232, CAN
XGND — 24V supply, STO Enable, ventilator, brake

5.6 Dynamic braking (brake circuit)

During braking with the aid of the motor, energy is fed back into the servo amplifier. This generated energy is dissipated as heat in the brake resistor. The brake resistor is switched in by the brake circuit.

The setup software can be used to adapt the brake circuit (thresholds) according to the electrical supply voltage.

Our customer service can help you with the calculation of the brake power that is necessary for your system. A simple method is described in the "Product Wiki" which is accessible at www.wiki-kollmorgen.eu. A description of the interface can be found on page 72.

Functional description:

1.- Individual amplifiers, **not coupled** through the DC bus link circuit (DC+, DC-)

When the energy fed back from the motor has an average or peak power that exceeds the preset level for the brake power rating, then the servo amplifier generates the warning “n02 brake power exceeded” and the brake circuit is switched off.

The next internal check of the DC bus link voltage (after a few milliseconds) detects an overvoltage and the output stage is switched off, with the error message “Overvoltage F02” (⇨ p.122).

The BTB/RTO contact (terminals X3B/14,15) will be opened at the same time (⇨ p.101)

2.- Several servo amplifiers **coupled** through the DC bus link (DC+, DC-)

Using the built-in brake circuit, several amplifiers of the same series can be operated off a common DC bus link (**observe page 70**), without requiring any additional measures.

90% of the **combined power** of all amplifiers is always available for peak and continuous power. The switch-off on overvoltage takes place as described under 1. (above) for the amplifier that has the lowest switch-off threshold (resulting from tolerances).

Technical data of the brake circuits depend on the amplifiers type and the mains voltage situation. See table on the next page.

Technical Data S7xx0:

Brake circuit			Supply voltage		
Type	Rated data	DIM	230 V	400 V	480 V
S70102	Switch-on threshold of brake circuit	V	400	720	840
	Overvoltage F02	V	455	800	900
	Internal brake resistor (RBi)	Ohm		33	
	Continuous power internal brake resistor (RBi)	W		50	
	Max. brake power (average for 1s)	kW	0,9	0,85	0,86
	Pulse brake power	kW	4	15	21
	External brake resistor (RBe), optional	Ohm		33	
	Continuous brake power external (RBe)	kW		0,3	
S70302	Switch-on threshold of brake circuit	V	400	720	840
	Overvoltage F02	V	455	800	900
	Internal brake resistor (RBi)	Ohm		33	
	Continuous power internal brake resistor (RBi)	W		50	
	Max. brake power (average for 1s)	kW	0,9	0,85	0,86
	Pulse brake power	kW	4	15	21
	External brake resistor (RBe), optional	Ohm		33	
	Continuous brake power external (RBe)	kW		1	
S70602	Switch-on threshold of brake circuit	V	400	720	840
	Overvoltage F02	V	455	800	900
	Internal brake resistor (RBi)	Ohm		33	
	Continuous power internal brake resistor (RBi)	W		75	
	Max. brake power (average for 1s)	kW	1,38	1,3	1,26
	Pulse brake power	kW	4	15	21
	External brake resistor (RBe), optional	Ohm		33	
	Continuous brake power external (RBe)	kW		1	
S71202/S7120S	Switch-on threshold of brake circuit	V	400	720	840
	Overvoltage F02	V	455	800	900
	Internal brake resistor (RBi)	Ohm		33	
	Continuous power internal brake resistor (RBi)	W		100	
	Max. brake power (average for 1s)	kW	1,93	1,75	1,7
	Pulse brake power	kW	4	15	21
	External brake resistor (RBe), optional	Ohm		33	
	Continuous brake power external (RBe)	kW		1,5	
S72402/S7240S	Switch-on threshold of brake circuit	V	400	720	840
	Overvoltage F02	V	455	800	900
	Internal brake resistor (RBi)	Ohm		23	
	Continuous power internal brake resistor (RBi)	W		200	
	Max. brake power (average for 1s)	kW	3,93	3,55	3,45
	Pulse brake power	kW	6	23	30
	External brake resistor (RBe), optional	Ohm		23	
	Continuous brake power external (RBe)	kW		4	

NOTE Suitable external brake resistors can be found in our accessories manual.

Technical data S7xx6:

Brake circuit			Supply voltage	
Type	Rated data	DIM	110 V	230 V
S70162	Switch-on threshold of brake circuit	V	200	400
	Overvoltage F02	V	235	455
	Internal brake resistor (RBi)	Ohm	33	
	Continuous power internal brake resistor (RBi)	W	50	
	Max. brake power (average for 1s)	kW	0,9	
	Pulse brake power	kW	1,2	4
	External brake resistor (RBe), optional	Ohm	33*	
	Continuous brake power external (RBe)	kW	0,3	
S70362	Switch-on threshold of brake circuit	V	200	400
	Overvoltage F02	V	235	455
	Internal brake resistor (RBi)	Ohm	33	
	Continuous power internal brake resistor (RBi)	W	50	
	Max. brake power (average for 1s)	kW	0,9	
	Pulse brake power	kW	1,2	4
	External brake resistor (RBe), optional	Ohm	33*	
	Continuous brake power external (RBe)	kW	1	
S70662	Switch-on threshold of brake circuit	V	200	400
	Overvoltage F02	V	235	455
	Internal brake resistor (RBi)	Ohm	33	
	Continuous power internal brake resistor (RBi)	W	75	
	Max. brake power (average for 1s)	kW	1,38	
	Pulse brake power	kW	1,2	4
	External brake resistor (RBe), optional	Ohm	33*	
	Continuous brake power external (RBe)	kW	1	
S71262/S7126S	Switch-on threshold of brake circuit	V	200	400
	Overvoltage F02	V	235	455
	Internal brake resistor (RBi)	Ohm	33	
	Continuous power internal brake resistor (RBi)	W	100	
	Max. brake power (average for 1s)	kW	1,93	
	Pulse brake power	kW	1,2	4
	External brake resistor (RBe), optional	Ohm	33*	
	Continuous brake power external (RBe)	kW	1,5	
S72462/S7246S	Switch-on threshold of brake circuit	V	200	400
	Overvoltage F02	V	235	455
	Internal brake resistor (RBi)	Ohm	23	
	Continuous power internal brake resistor (RBi)	W	200	
	Max. brake power (average for 1s)	kW	3,93	
	Pulse brake power	kW	1,74	6
	External brake resistor (RBe), optional	Ohm	23*	
	Continuous brake power external (RBe)	kW	4	

* Can be reduced to 15 Ohm (PBALRES 15) if required.

NOTE Suitable external brake resistors can be found in our accessories manual.

5.7 Switch-on and switch-off behavior

This chapter describes the switch-on and switch-off behavior of the S700 and the steps required to achieve operational stopping or emergency stop behavior that complies with standards.

NOTE

The servo amplifier's 24 V supply must remain constant. The ASCII commands ACTFAULT (error response, also depends on the specific error, see ERRCODE) and STOPMODE (Enable signal response) dictate how the drive will behave.

ACTFAULT / STOPMODE	Behavior (see also ASCII reference in the **online help** of the setup software)
0	Motor coasts to a standstill in an uncontrolled manner
1 (default)	Motor is braked in a controlled manner

Behavior during a power failure

The servo amplifiers use an integrated circuit to detect if one or more input phases (power supply feed) fail. The behavior of the servo amplifier is set using the setup software: Under "**Response to Loss of Input Phase**" (PMODE) on the **Basic Setup** screen, select:

- **Warning** if the higher-level control system is to bring the drive to a standstill: Warning n05 is output if an input phase is missing, and the motor current is limited to 4 A. The servo amplifier is not disabled. The higher-level control system can now selectively end the current cycle or start bringing the drive to a standstill. Therefore, the error message "MAINS BTB, F16" is output on a digital output of the servo amplifier and evaluated by the control system, for instance.
- **Error message** if the servo amplifier is to bring the drive to a standstill: Error message F19 is output if an input phase is missing. The servo amplifier is disabled and the BTB contact opens. Where the factory setting is unchanged (ACTFAULT=1), the motor is braked using the set "EMERGENCY STOP RAMP".

Behavior when undervoltage threshold is reached

If the undervoltage threshold is undershot in the DC bus link (the threshold value depends on the type of servo amplifier), the error message "UNDERVOLTAGE, F05" is displayed. The drive response depends on the ACTFAULT and STOPMODE setting.

Behavior with enabled "holding brake" function

Servo amplifiers with an enabled holding brake function have a special procedure for switching off the output stage (⇨ p. 32). Removing the ENABLE signal triggers electrical braking.
As with all electronic circuits, the general rule applies that there is a possibility of the internal "holding brake" module failing. Functional safety, e.g. with hanging load (vertical axes), requires an additional mechanical brake which must be safely operated, e.g. via the Safety Card S1-2.

Behavior of the safety function STO

With the functional safe restart lock STO, the drive can be secured on standstill using its internal electronics so that even when power is being supplied, the drive shaft is protected against unintentional restart. The chapter "Safety function STO" describes how to use the STO function. See page 41 onwards.

5.7.1 Behavior in standard operation

The behavior of the servo amplifier always depends on the current setting of a number of different parameters (e.g., ACTFAULT, VBUSMIN, VELO, STOPMODE, etc. see online help). The diagram below illustrates the correct functional sequence for switching the servo amplifier on and off.

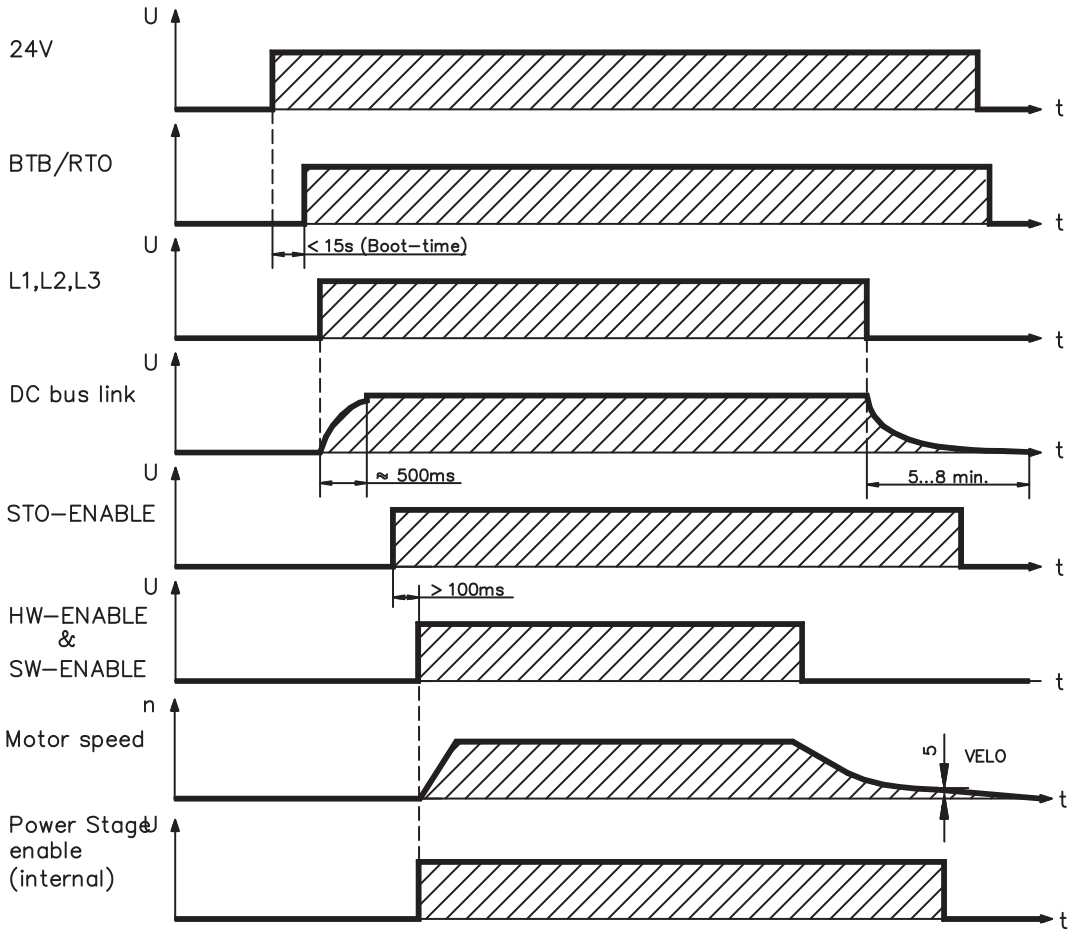

Devices which are equipped with a selected “Brake” function use a special sequence for switching off the output stage (⇨ p.32).

The built-in safety function STO can be used to switch off the drive, so that functional safety is ensured at the drive shaft (⇨ p. 41).

NOTE In case of a built-in safety card, wait for the Ready Acknowledge (X30 Pin 16) of the safety card before enabling the servo amplifier again.

5.7.2 Behavior in the event of an error (with standard setting)

The behavior of the servo amplifier always depends on the current setting of a number of different parameters (ACTFAULT, VBUSMIN, VELO, STOPMODE, etc.; see online help).

CAUTION

Some faults (see ERRCODE) force the output stage to switch-off immediately, independant from the ACTFAULT setting. Danger of injury by uncontrolled coasting of the load. An additional mechanical brake is required for funktional safety, which must be safely operated

The diagram shows the startup procedure and the procedure that the internal control system follows in the event of motor overtemperature, assuming that the standard parameter settings apply. Fault F06 does not switch-off the output stage immediately, with ACTFAULT=1 a controlled emergency brake is started first.

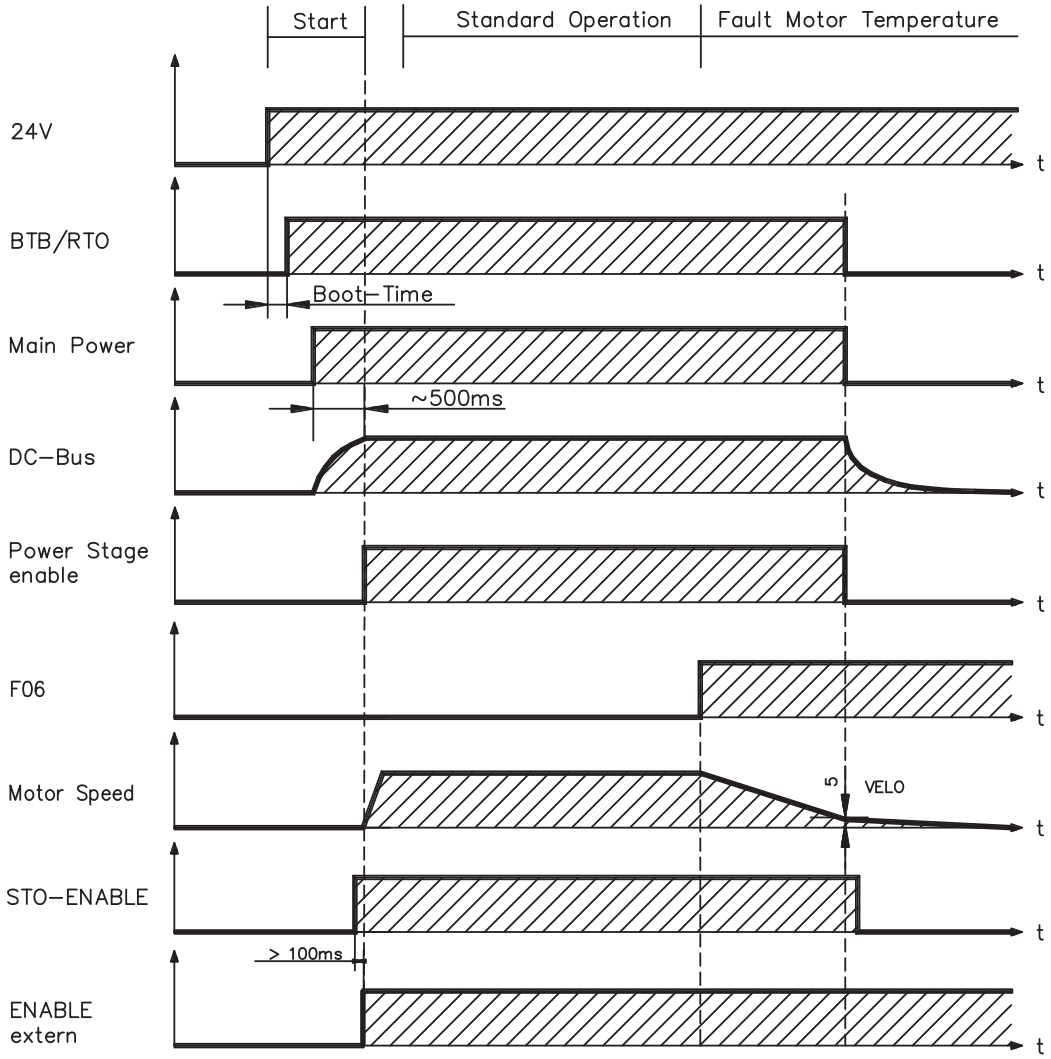

(F06 = error messages "Motor Temperature")

Even if there is no intervention from an external control system (in the example, the ENABLE signal remains active), the motor is immediately braked using the emergency stop ramp if the error is detected and assuming that no changes have been made to the factory setting (ACTFAULT=1).

NOTE In case of a built-in safety card, wait for the Ready Acknowledge (X30 Pin 16) of the safety card before enabling the servo amplifier again.

5.8 Stop-, Emergency Stop-, Emergency Off Function to IEC 60204

With the functional safe, certified function STO (see page 41 onwards) the drive can be secured on standstill (torque-free) using its internal electronics so that even when power is being supplied, the drive shaft is protected against unintentional restart (up to SIL CL3 according to IEC 62061, PLe according to ISO 13849-1).

With built-in “Safety” expansion card, more safe drive functions in accordance with IEC 61508 are provided (see page 152 ff).

The parameters “STOPMODE” and “ACTFAULT” must be set to 1 in order to implement the stop and emergency stop categories. If necessary, change the parameters via the terminal screen of the setup software and store the data in the EEPROM.

Examples for implementation can be found in the Product WIKI on page "Stop and Emergency Stop Function".

5.8.1 Stop

The Stop function is used to shut down the machine in normal operation. The Stop functions are defined by IEC 60204.

Category 0: Shut-down by immediate switching-off of the energy supply to the drive machinery (i.e. an uncontrolled shut-down); this can be done with the built-in STO functionality (see page 41)

Category 1: A controlled shut-down , whereby the energy supply to the drive machinery is maintained to perform the shut-down, and the energy supply is only interrupted when the shut-down has been completed;

Category 2: A controlled shut-down, whereby the energy supply to the drive machinery is maintained.

The Stop Category must be determined by a risk evaluation of the machine. In addition, suitable means must be provided to guarantee a reliable shut-down.

Category 0 and Category 1 Stops must be operable independently of the operating mode, whereby a Category 0 Stop must have priority. Stop functions must be implemented by **disconnection** of the appropriate circuitry, and have priority over assigned start functions.

If necessary, provision must be made for the connection of protective devices and lock-outs. If applicable, the Stop function must signal its status to the control logic. A reset of the Stop function must not create a hazardous situation.

Examples for implementation can be found in the Product WIKI on page "Stop and Emergency Stop Function".

5.8.2 Emergency Stop

The Emergency Stop function is used for the **fastest possible shutdown** of the machine in a dangerous situation. The Emergency Stop function is defined by IEC 60204. Principles of emergency stop devices and functional aspects are defined in ISO 13850.

The Emergency Stop function will be triggered by the manual actions of a single person. It must be fully functional and available at all times. The user must understand instantly how to operate this mechanism (without consulting references or instructions).

NOTE

The Stop Category for the Emergency Stop must be determined by a risk evaluation of the machine.

In addition to the requirements for stop, the Emergency Stop must fulfil the following requirements:

- Emergency Stop must have priority over all other functions and controls in all operating modes.
- The energy supply to any drive machinery that could cause dangerous situations must be switched off as fast as possible, without causing any further hazards (Stop Category 0) or must be controlled in such a way, that any movement that causes danger, is stopped as fast as possible (Stop Category 1).
- The reset must not initiate a restart.

Examples for implementation can be found in the Product WIKI on page "Stop and Emergency Stop Function".

5.8.3 Emergency Off

The Emergency Off function is used to switch-off the electrical power supply of the machine. This is done to prevent users from any risk from electrical energy (for example electrical impact). Functional aspects for Emergency Off are defined in IEC 60364-5-53.

The Emergency Off function will be triggered by the manual actions of a single person.

NOTE

The result of a risk evaluation of the machine determines the necessity for an Emergency Off function.

Emergency Off is done by switching off the supply energy by electro-mechanical switching devices. This results in a category 0 stop. If this stop category is not possible in the application, then the Emergency Off function must be replaced by other measures (for example by protection against direct touching).

5.9 Safety function STO

A frequently required application task is the safe torque off and the protection of personnel against unintentioned restarting of drives. The S700 servo amplifier offers, even in the basic version, a two channel STO function (**S**afe **T**orque **O**ff). The function blocks the trigger pulses of the power transistors (pulse inhibitor).

Advantages of the safety function STO:

— the DC bus link remains charged up, since the mains supply line remains active
— only low voltages are switched, so there is no contact wear
— very little wiring is required
— single or dual channel control possible
— SIL2 or SIL3 solutions possible

The STO safety function corresponds to stop category 0 (uncontrolled stopping) acc. to EN 60204-1. The safety function STO can be operated from external safety switch gears (relays), from a safe external control (semiconductor output or driven contact) or from the built-in safety card S1-2 or S2-2 (see p. 152).

The STO safety concept is certified by the TÜV. The safety circuit concept for realizing the safety function "Safe Torque Off" in the servo amplifiers S700 is suited for SIL CL3 according to IEC 62061 and PLe according to ISO 13849-1.

NOTE

SIL2 / PLd solutions can be implemented with single-channel or dual-channel control with simple safety switching devices.
A SIL3 / PLe solution requires a safety control that periodically tests the safe switching of the pulse inhibitor by analyzing the feedback signal.

5.9.1 Safety characteristic data

The subsystems (servo amplifiers) are totally described for safety technics with the characteristic data SIL CL, PFH_D and T_M.

Device	Operation mode	EN 13849-1	EN 62061	PFH_D [1/h]	T_M [Year]
STO	STO single channel	PLd, Cat 3	SIL CL2	7.05E-08	20
STO	STO dual channel	PLd, Cat 3	SIL CL2	7.05E-08	20
STO	STO dual channel + periodical testing	PLe, Cat 4	SIL CL3	1.04E-09	20

5.9.2 Enclosure

Since the servo amplifier meets enclosure IP20, you must select the enclosure ensuring a safe operation of the servo amplifier referring to the enclosure. The enclosure must meet IP54 at least.

5.9.3 Wiring

When using STO wiring leads outside the control cabinet, the cables must be laid durably (firmly), protected from outside damage (e.g. laying in a cable duct), in different sheathed cables or protected individually by grounding connection.
Wiring remaining within the demanded enclosure must meet the requirements of the standard IEC 60204-1.

5.9.4 Important notes

WARNING

The function STO does not provide an electrical separation from the power output. Risk of electric shock! If access to the motor power terminals is necessary, the S700 must be disconnected from mains supply considering the discharging time of the intermediate circuit.

NOTICE

In case of single channel control:
If the STO is automatically activated by a control system, then make sure that the output of the control is supervised for possible malfunction. This can be used to prevent a faulty output from unintentionally activating the function STO. Since STO is used in a single-channel system, erroneous engaging will not be recognized.

Controlled braking

When STO is engaged during operation by separating input STO1-Enable and STO2-Enable from 24 VDC, the motor runs down out of control and the servo amplifier displays the error F27. There is no possibility of braking the drive controlled. Risk from uncontrolled movement!
If a controlled braking before the use of STO is necessary, the drive must be braked and the inputs STO1-ENABLE and STO2-Enable have to be separated from +24 VDC time-delayed.

NOTICE

Keep to the following functional sequence when the drive must be braked in a controlled manner:
1. Brake the drive in a controlled manner (velocity setpoint = 0V)
2. When speed = 0 rpm, disable the servo amplifier (enable = 0V)
3. If there is a suspended load, block the drive mechanically
4. Activate STO (STO1-Enable and STO2-Enable = 0V)

5.9.5 Use as directed STO

The STO function is **exclusively** intended to provide functional safety, by preventing the restart of a system. To achieve this functional safety, the wiring of the safety circuits must meet the safety requirements of IEC 60204, ISO 12100, IEC 62061 respectively ISO 13849-1.

In case of single channel control: if STO is automatically activated by a control system, then make sure that the output of the control is monitored for possible malfunction.

To achieve PL e or SIL CL3, the safe switching of the pulse inhibitor must be tested periodically by analyzing the feedback signal from the safety control (⇨ p. 50).

5.9.6 Prohibited Use STO

The STO function must **not** be used if the drive is to be made inactive for the following reasons :

1. Cleaning, maintenance and repair operations, long inoperative periods:
   In such cases, the entire system should be disconnected from the supply by the personnel, and secured (main switch).
2. Emergency-Off situations: the mains contactor must be switched off (by the emergency-Off button).

5.9.7 Technical data and pinning

STO1-Enable and STO2-Enable	Data
Input voltage	20V..30V
Input current	33mA – 40mA (Ieff)
Peak current	100mA (Is)
Response time (falling edge at STO input until energy supply to motor is interrupted)	STO1: 1ms STO2: 2ms

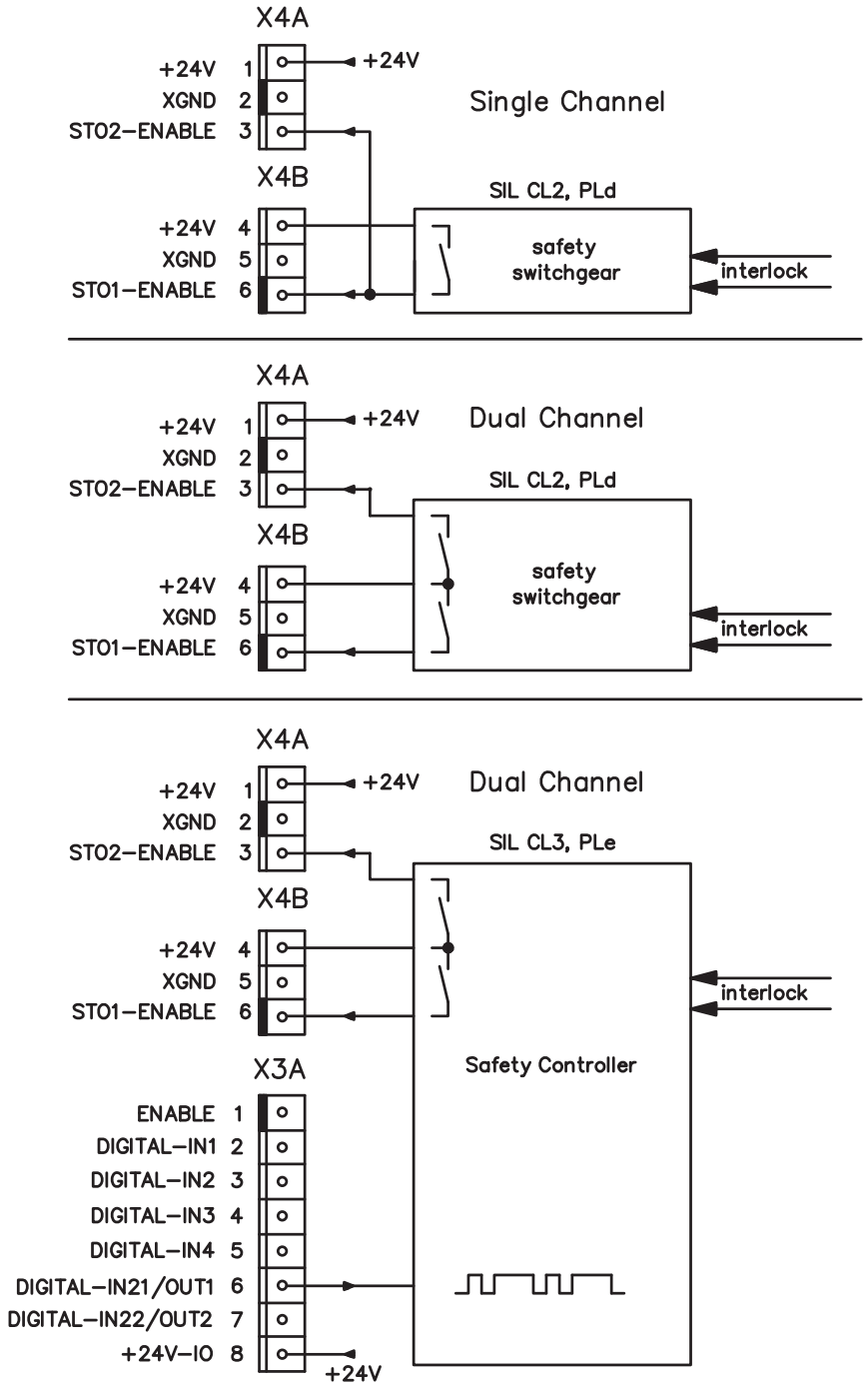

NOTE To achieve PLe / SIL CL3, the safe switching of the pulse inhibitor must be tested periodically by analyzing the status signal from a safety control. Therefore the status must be linked to one of the digital outputs DIGITAL-OUT1 or 2 (X3A/6 or X3A/7) with the ASCII command OxMODE70.

5.9.8 Functional description

In case of use of the STO function the inputs STO1- Enable and STO2-Enable must be connected to the exits of a security control or a safety relay, which meets at least to the requirements of the SIL CL2 according to IEC 62061 and PLd according to ISO 13849-1 (see the connection diagrams from page 46).

Possible states of the servo amplifier in connection with STO:

STO1-ENABLE STO2-ENABLE	ENABLE	Display	Motor has torque	SIL CL2 or 3 safety
0 V	0 V	-S-	no	yes
0 V	+24 V	F27	no	yes
+24 V	0 V	normal status e.g. 06	no	no
+24 V	+24 V	normal status e.g. E06	yes	no

SIL2/PLd Single Channel Control

With the single-channel control of the STO (SIL2/PLd) safety function, both switch-off paths STO1-Enable and STO2-Enable are switched by one output of a safety switching device (e.g. safety relay), see example ⇨ p. 46.
In case of single channel usage of STO, erroneous engaging will not be recognized. Therefore the output of the control must be supervised for possible malfunction.

SIL2/PLd Dual Channel Control

With the dual-channel control of the STO (SIL2/PLd) safety function, the switch-off paths STO1-Enable and STO2-Enable are switched separately by two outputs of a safety switching device (e.g. safety relay), see example on ⇨ p. 47.

SIL3/PLe Dual Channel Control

With the dual-channel control of the STO safety function, the switch-off paths STO1-Enable and STO2-Enable are switched separately by two outputs of a safety control, see example on ⇨ p. 48.
To achieve PL e or SIL CL3, the safe switching of the pulse inhibitor must be tested periodically by analyzing the feedback signal from the safety control (⇨ p. 50). The feedback signal is placed at one of the digital outputs DIGITAL-OUTx (X3A/6 or X3A/7, see p. 101) of the S700 with the ASCII command OxMODE70.

NOTICE When wiring the STO inputs within one enclosure it must be paid attention to the fact that the used cables and the enclosure meet the requirements of IEC 60204-1.
If the wiring leads outside the demanded enclosure, the cables must be laid durably (firmly), and protected from outside damage (see chapter 5.9.3).

NOTE If STO function is not needed in the application, then the inputs STO1-ENABLE and STO2-ENABLE must be connected directly with +24VDC. STO is passed by now and cannot be used. Now the servo amplifier is not a safety component referring to the EC Machine Directive.

5.9.8.1 Safe operation sequence

WARNING

If the STO function is activated, the amplifier cannot hold the load, the motor no longer supplies torque. Risk of injury from suspended load! Drives with suspended loads must also be safely blocked using a mechanical means (e.g. with the motor holding brake).

CAUTION

When STO is engaged during operation by separating input STO1-Enable and STO2-Enable from 24 VDC, the motor runs down out of control and the servo amplifier displays the error F27. There is no possibility of braking the drive controlled. Risk from uncontrolled movement!

If a controlled braking before the use of STO is necessary, the drive must be braked and the inputs STO1-ENABLE and STO2-Enable have to be separated from +24 VDC time-delayed.

1. Brake the drive in a controlled manner (speed setpoint = 0V)
2. When speed = 0 rpm, disable the servo amplifier (enable = 0V)
3. If there is a suspended load, block the drive mechanically
4. Activate STO (STO1-Enable and STO2-Enable = 0V)

The diagram shows how STO should be used to ensure a safe stop of the drive and error free operation of the servo amplifier.

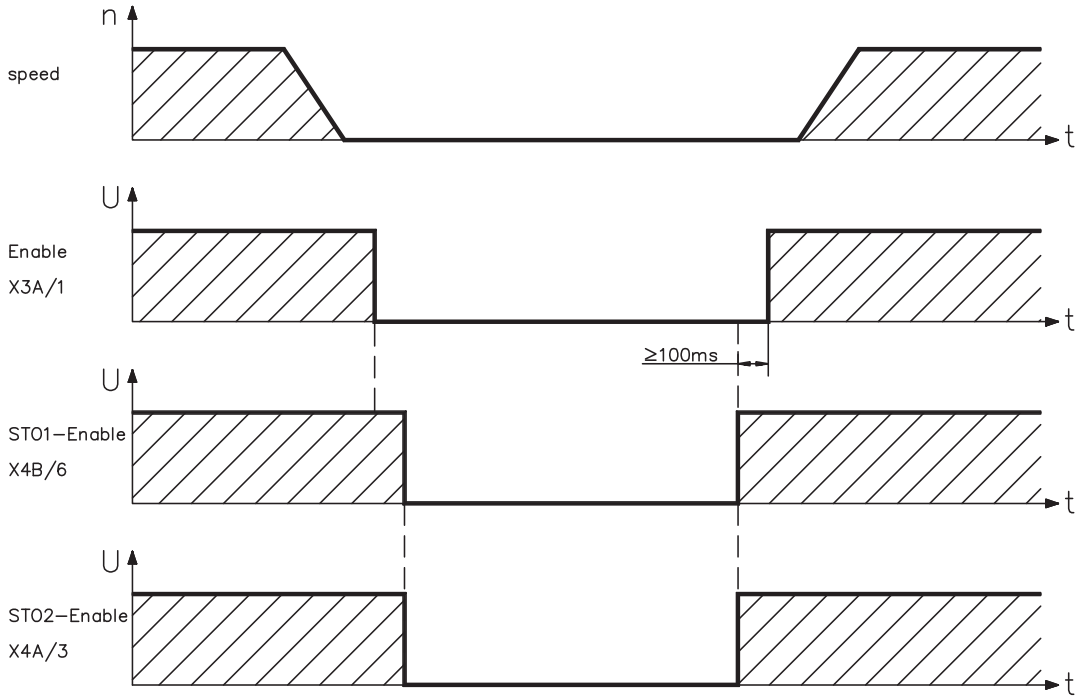

5.9.8.2 Control circuit single channel SIL2/PLd (example)

The example shows a circuit diagram with one axis connected to an emergency stop circuit. The STO of the drives is switched by a protective screen. A single channel switch-off is used. The safety switch gears used in the example are manufactured by Pilz and fulfill at least the PLd acc. to ISO 13849-1. Further information to the safety switch gears is available from Pilz. The use of safety switch gears of other manufacturers is possible, if these also fulfill the SIL CL2 according to IEC 62061 and PLd according to ISO 13849-1.

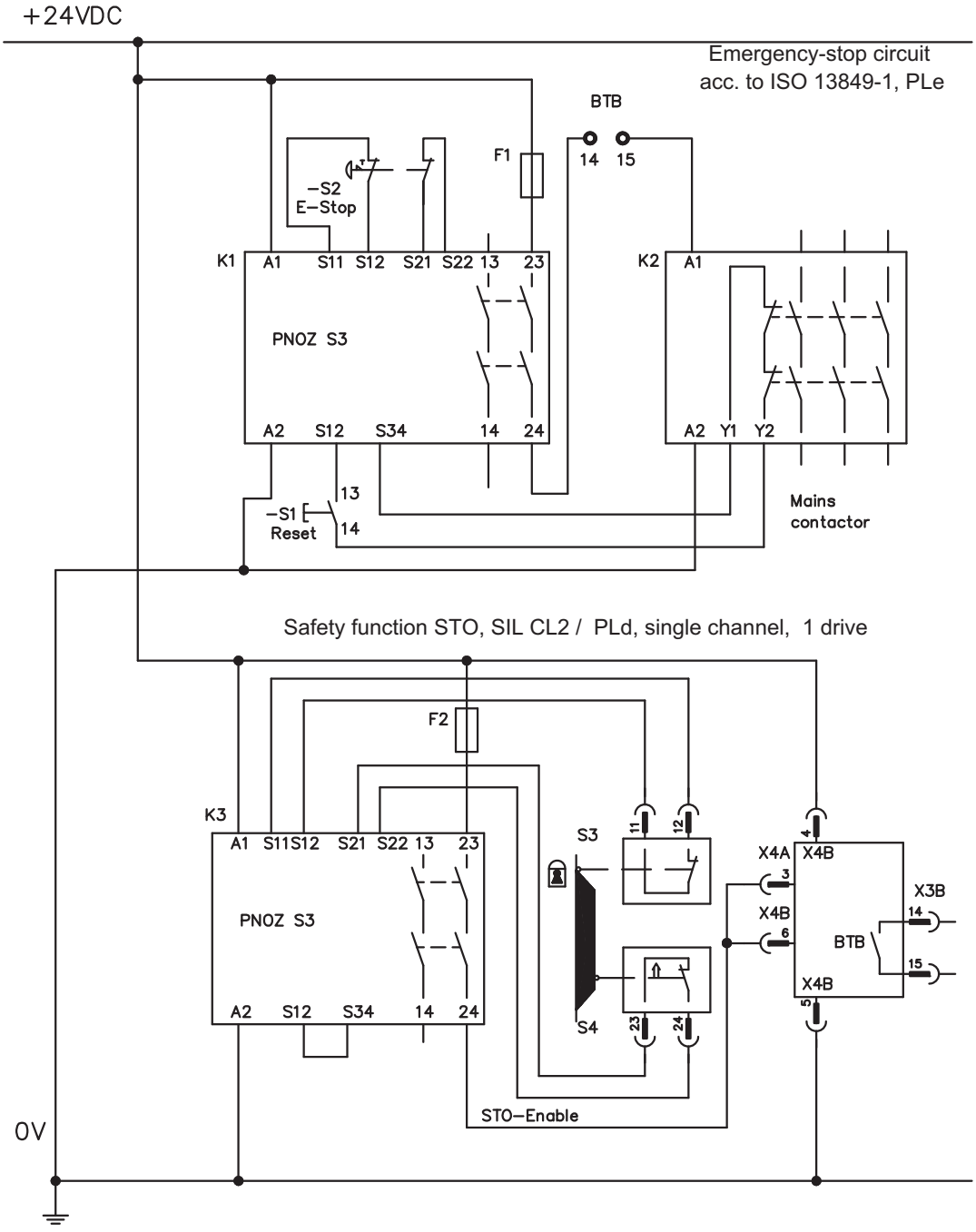

NOTE Consider the wiring instructions on page 41.

5.9.8.3 Control circuit dual channel SIL2/PLd (example)

The example shows a circuit diagram with one axis connected to an emergency stop circuit. The STO of the drives is switched by a protective screen. A dual channel switch-off is used. The safety switch gears used in the example are manufactured by Pilz and fulfill at least the PLd acc. to ISO 13849-1. Further information to the safety switch gears is available from Pilz. The use of safety switch gears of other manufacturers is possible, if these also fulfill the SIL CL2 according to IEC 62061 and PLd according to ISO 13849-1.

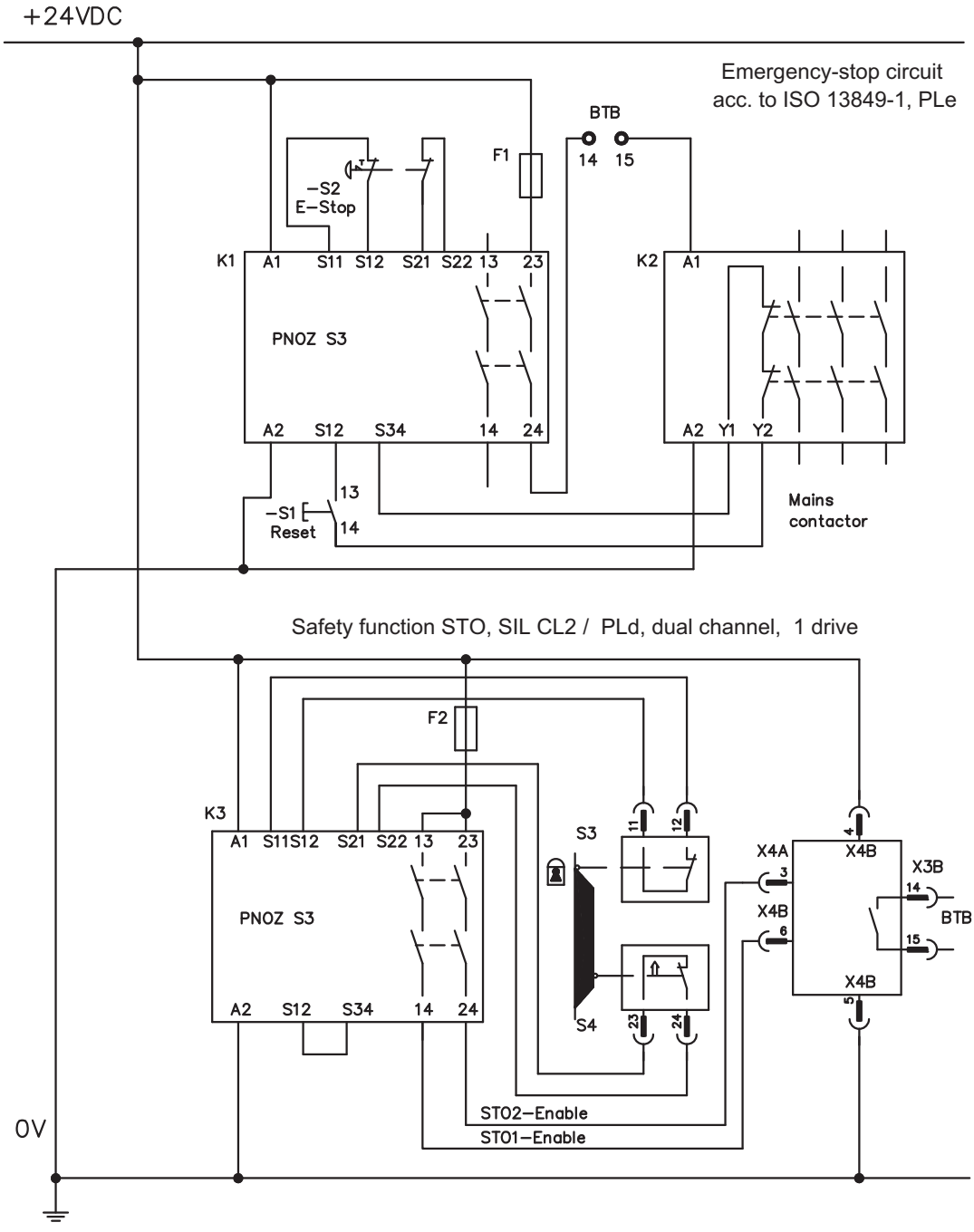

NOTE Consider the wiring instructions on page 41.

5.9.8.4 Control circuit dual channel SIL3/PLe (example)

The example shows a circuit diagram with one axis connected to an emergency stop circuit. The STO of the drives is switched by a protective screen. A dual channel switch-off is used. The safe switching of the pulse inhibitor must be tested periodically by analyzing the feedback in the safety control.
The safety controller used in the example is manufactured by Pilz and fulfills at least the PLe acc. to ISO 13849-1. Further information to the safety controllers are available from Pilz. The use of safety controlelrs of other manufacturers is possible, if these also fulfill the SIL CL3 according to IEC 62061 and PLe according to ISO 13849-1.

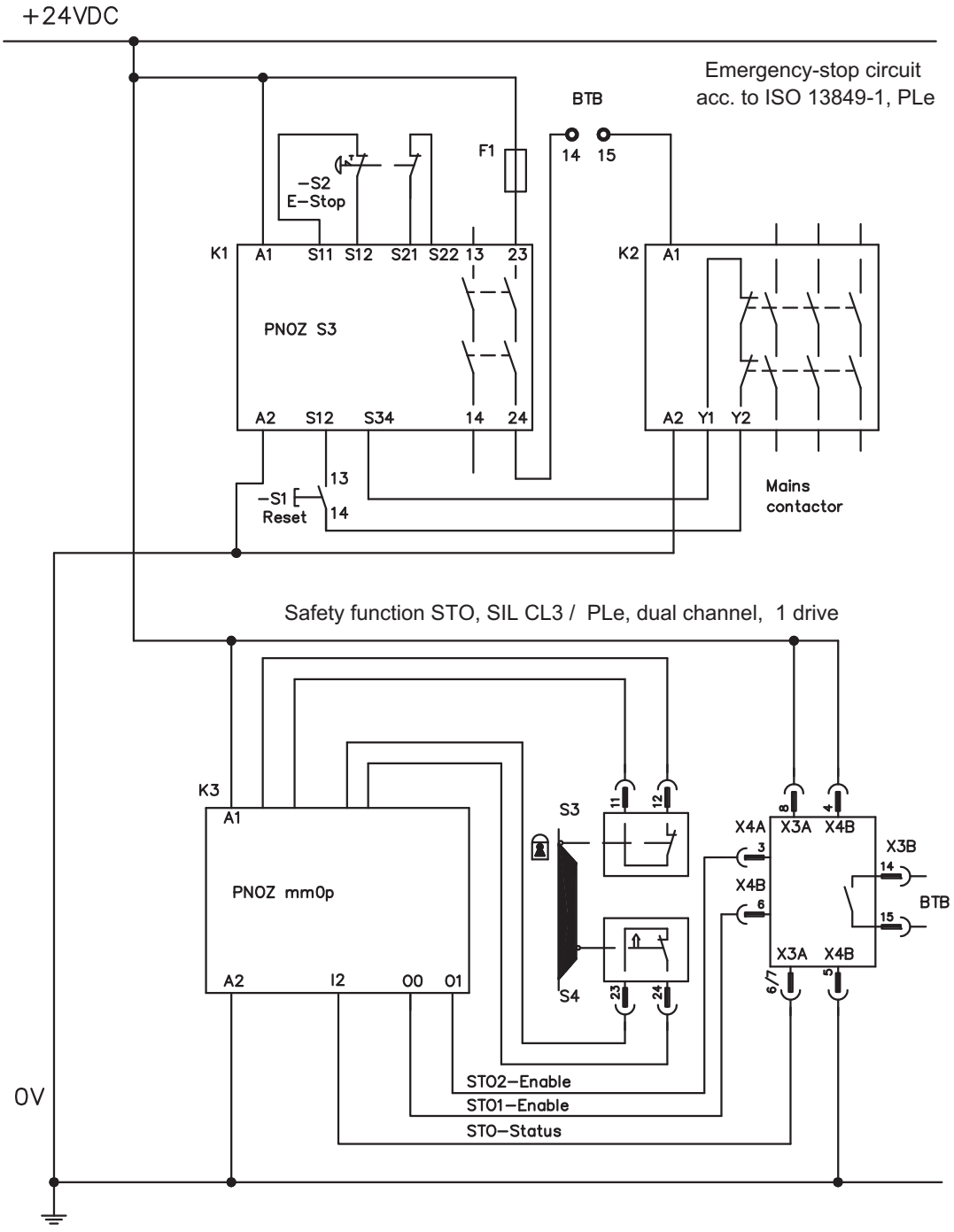

NOTE Consider the wiring instructions on page 41.

5.9.8.5 Mains supply circuit (example)

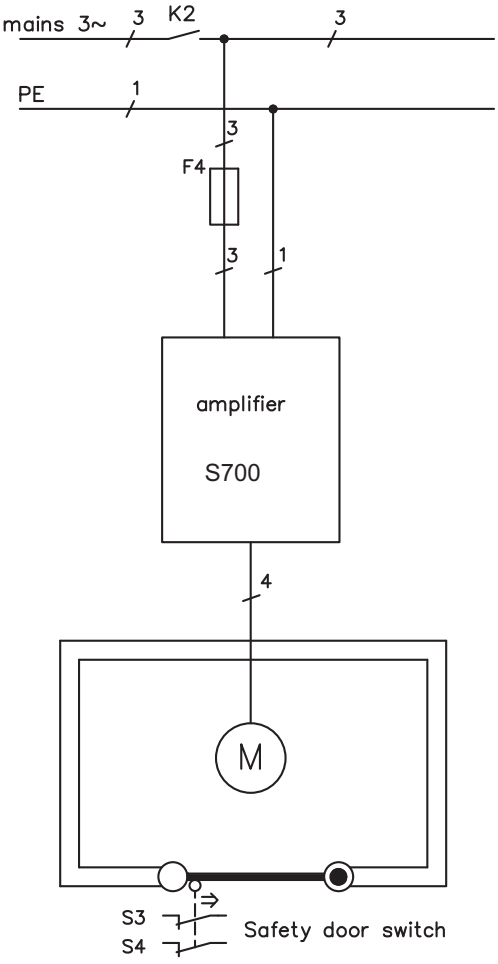

5.9.9 Functional test

5.9.9.1 SIngle or Dual Channel control, SIL CL2 / PLd

NOTICE

With initial starting and after each interference into the wiring of the drive or after exchange of one or several components of the drive the function of STO must be tested.

1. Method:

1. Stop drive, with setpoint 0V, keep servo amplifier enabled (Enable=24V).
   DANGER: Do not enter hazardous area!
2. Activate STO1-Enable and STO2-Enable e.g. by opening protective screen (voltage at X4A/3=0V and X4B/6=0V).

Correct behavior: the BTB/RTO contact opens, the net contactor releases and the servo amplifier displays error F27.

2. Method:

1. Stop all drives, with setpoint 0V, disable servo amplifier (Enable=0V).
2. Activate STO1-Enable and STO2-Enable e.g. by opening protective screen (voltage at X4A/3=0V and X4B/6=0V).

Correct behavior: the servo amplifier displays **-S-**.

5.9.9.2 SIL CL3 / PLe Dual Channel control

NOTICE

To achieve PLe / SIL CL3, the safe switching of the pulse inhibitor must be tested periodically by analyzing the feedback signal from a safety control:

- **At the start of a system**
- **At the restart after triggering a protective device**
- **At least every 8 hours by the operator.**

The inputs STO1-ENABLE and STO2-ENABLE are switched in turns according to a defined test sequence. The switching state of the pulse inhibitor is available at a digital output of the S700 and is analyzed by a safety control.

The test sequence for the functional test of the safe pulse inhibitor must be performed as shown in the following time chart. Prerequisites for the start of the test sequence:

- Operational readiness BTB/RTO = “1"
- Enable signal ENABLE = “0"
- STO1-ENABLE and STO2-ENABLE = “0"

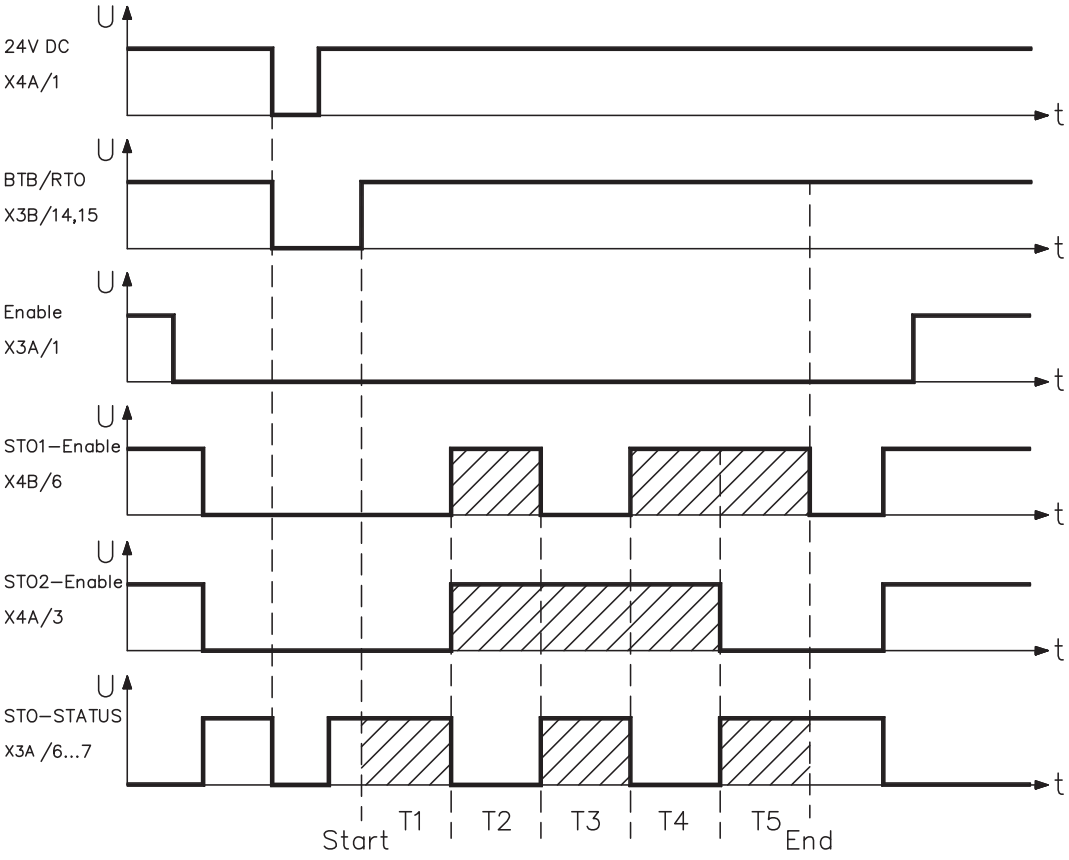

Legend:

STO1-ENABLE: digital input, 1st switch-off path

STO2-ENABLE: digital input, 2nd switch-off path

STO-STATUS: digital output, switching state of pulse inhibitor

T1 … T5: Test sequence

Start: Start of test sequence

End: End of test sequence

5.10 Shock-hazard protection

5.10.1 Leakage current

Leakage current via the PE conductor results from the combination of equipment and cable leakage currents. The leakage current frequency pattern comprises a number of frequencies, whereby the residual-current circuit breakers definitively evaluate the 50Hz current. As a rule of thumb, the following assumption can be made for leakage current on our low-capacity cables at a mains voltage of 400 V, depending on the clock frequency of the output stage:

I_{leak} = n x 20mA + L x 1mA/m at 8kHz clock frequency at the output stage

I_{leak} = n x 20mA + L x 2mA/m at a 16kHz clock frequency at the output stage

(where Ileak=leakage current, n=number of amplifiers, L=length of motor cable)

At other mains voltage ratings, the leakage current varies in proportion to the voltage.

Example: 2 x servo amplifiers + a 25m motor cable at a clock frequency of 8kHz:
2 x 20mA + 25m x 1mA/m = 65mA leakage current.

NOTE

Since the leakage current to PE is more than 3.5 mA, in compliance with IEC 61800-5-1 the PE connection must either be doubled or a connecting cable with a cross-section >10mm² must be used. Use the PE terminals and the PE bolt in order to fulfil this requirement.

The following measures can be used to minimize leakage currents.
— Reduce the length of the engine cable
— Use low-capacity cables (see p.61)
— Remove external EMC filters (radio-interference suppressors are integrated)

5.10.2 Residual current protective device (RCD)

In conformity with IEC 60364-4-41 – Regulations for installation and IEC 60204 – Electrical equipment of machinery, residual current protective devices (called RCD below) can be used provided the requisite regulations are complied with. The S700 is a 3-phase system with a B6 bridge. Therefore, **RCDs which are sensitive to all currents** must be used in order to detect any D.C. fault current. Refer to chapter 5.10.1 for the rule of thumb for determining the leakage current.

Rated residual currents in the RCD

10 - 30 mA	Protection against "indirect contact" for stationary and mobile equipment, as well as for "direct contact".
50 - 300 mA	Protection against "indirect contact" for stationary equipment

NOTE

Recommendation: In order to protect against direct contact (with motor cables shorter than 5 m) we recommend that each servo amplifier be protected individually using a 30mA RCD which is sensitive to all currents.

If you use a selective RCD, the more intelligent evaluation process will prevent spurious tripping of the RCD.

5.10.3 Isolating transformers

When protection against indirect contact is absolutely essential despite a higher leakage current, or when an alternative form of shock-hazard protection is sought, the S700 can also be operated via an isolating transformer (schematic connection see p.66). A ground-leakage monitor can be used to monitor for short circuits.

NOTE

Be advised to keep the length of wiring between the transformer and the servo amplifier as short as possible.

This page has been deliberately left blank.

6 Mechanical Installation

6.1 Important notes

WARNING

There is a danger of electrical shock by high EMC level which could result in injury, if the servo amplifier (or the motor) is not properly EMC-grounded. Do not use painted (i.e. non-conductive) mounting plates. In unfavourable circumstances, use copper mesh tape between the earthing bolts and earth potential to deflect currents.

NOTICE Protect the servo amplifier from impermissible stresses. In particular, do not let any components become bent or any insulation distances altered during transport and handling. Avoid contact with electronic components and contacts.

NOTICE The servo amplifier will switch-off itself in case of overheating. Ensure that there is an adequate flow of cool, filtered air into the bottom of the control cabinet, or use a heat exchanger. Please refer to page 31.

NOTICE Don't mount devices, which produce magnetic fields, directly beside the servo amplifier. Strong magnetic fields could directly affect internal components. Install devices which produce magnetic field with distance to the servo amplifiers and/or shield the magnetic fields.

6.2 Guide to mechanical installation

The following notes should help you to carry out the mechanical installation.

Site	In a closed control cabinet. Please refer to page 31. The site must be free from conductive or corrosive materials. For the mounting position in the cabinet ⇨ p.54.
Ventilation	Check that the ventilation of the servo amplifier is unimpeded, and keep within the permitted ambient temperature ⇨ p.31. Keep the required space clear above and below the servo amplifier ⇨ p.54.
Assembly	Assemble the servo amplifier and power supply close together, on the conductive, **grounded** mounting plate in the cabinet.
Grounding Shielding	For EMC-compliant shielding and grounding ⇨ p.65. Ground the mounting plate, motor housing and CNC-GND of the control system. Notes on connection techniques ⇨ p.60.

6.3 Assembly

Material: three M5 hexagon socket screws to ISO 4762
Tool required : 4 mm Allen key

NOTE Remove the fan before mounting the servo amplifier and replace it again afterwards (⇨ p.56).

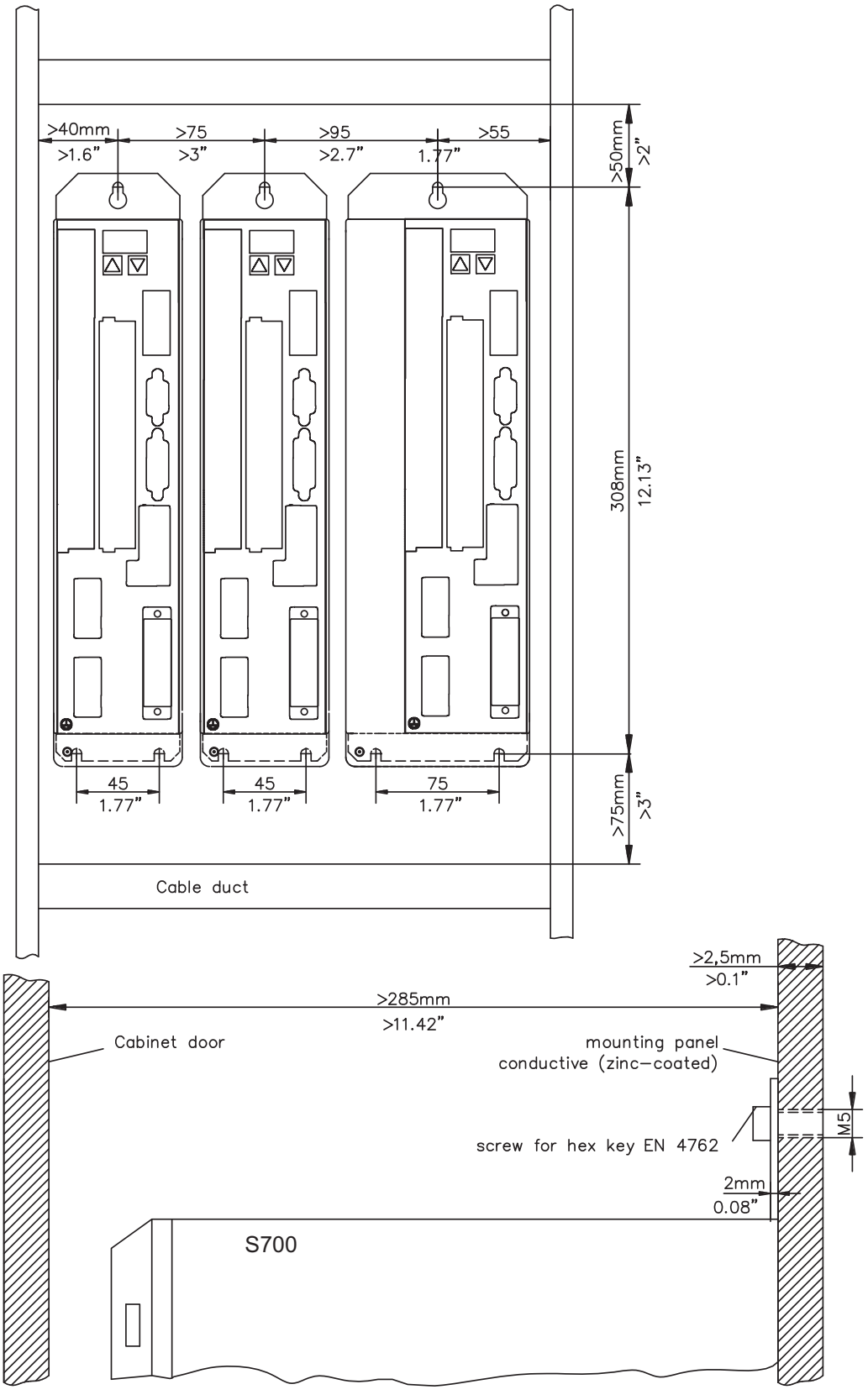

6.4 Dimensions

S701…712

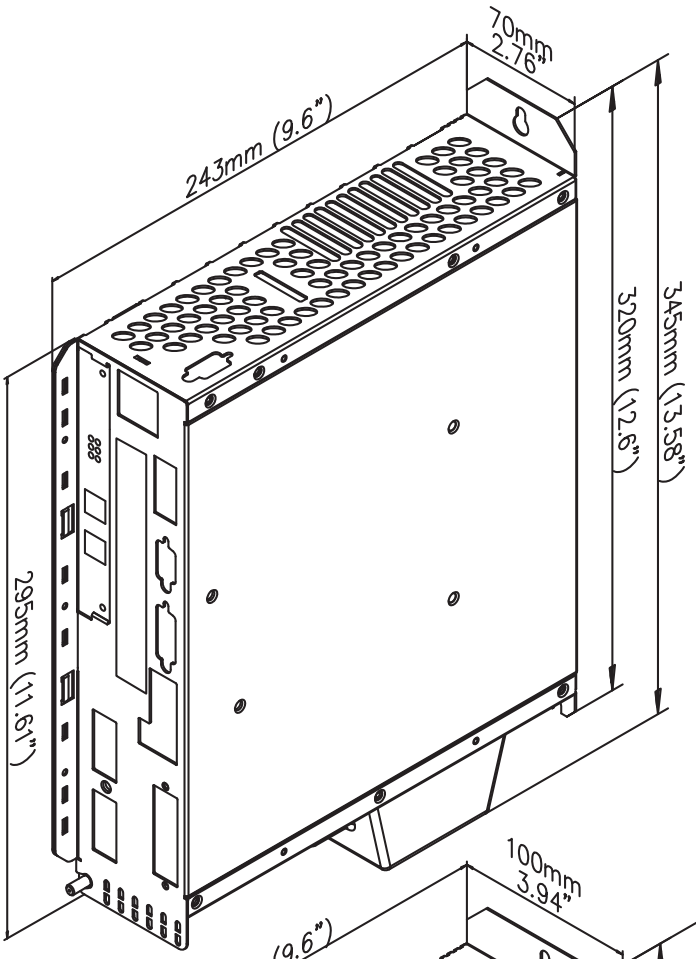

S724

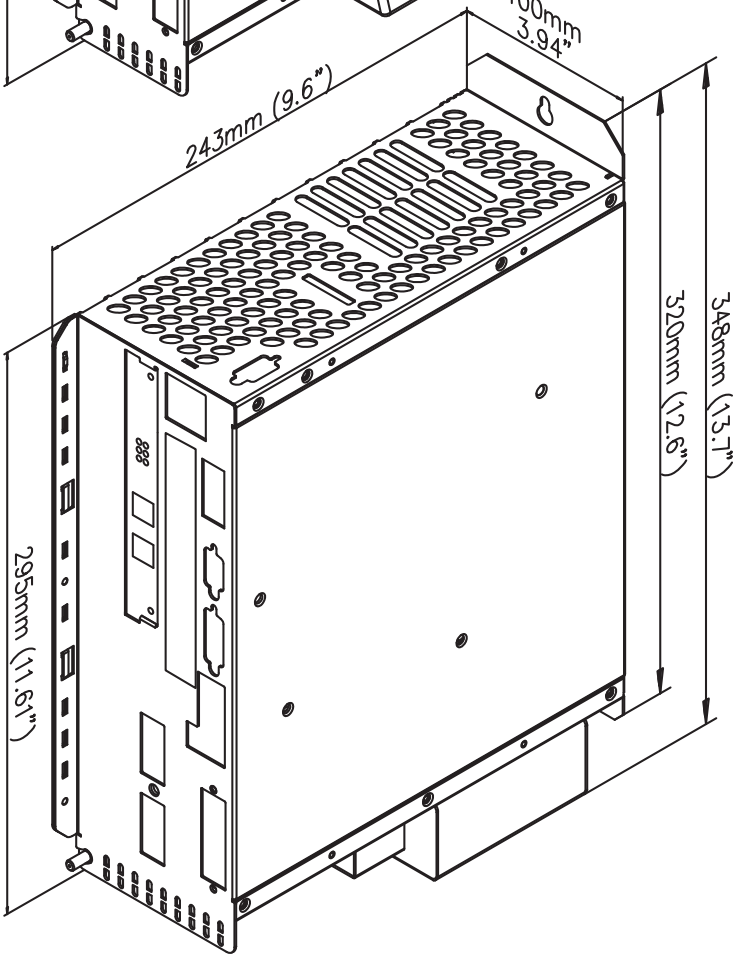

6.5 Fan assembly

The fan does not require wiring. Built-in connectors in the fan casing plug into sockets on the underside of the S700.

NOTE Remove the fan before mounting the servo amplifier and replace it again afterwards.

Mounting and removing the fan (models S701...712)

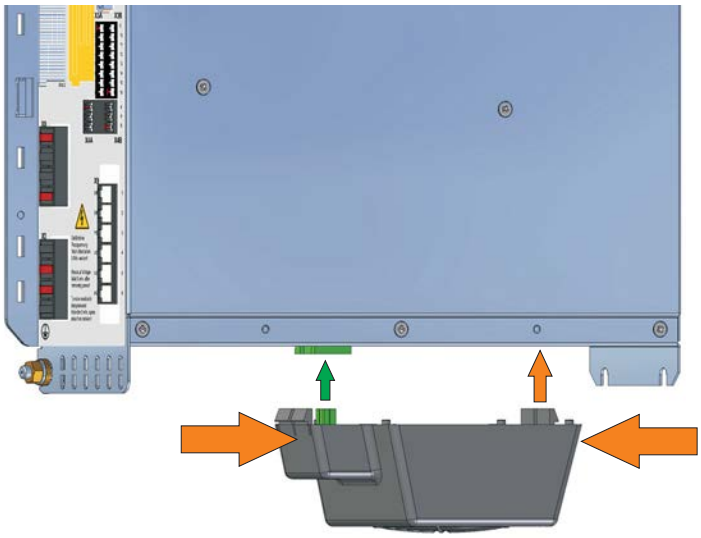

Removal:
Gently squeeze the fan casing together lengthwise and pull the fan casing down.

Mounting:
Position the fan so that the green connector is aligned with the socket in the S700. Push the fan onto the connector until the fan casing clicks into place. Gently squeeze the fan casing together lengthwise to check that it is fully engaged.

Mounting and removing the fan (model S724)

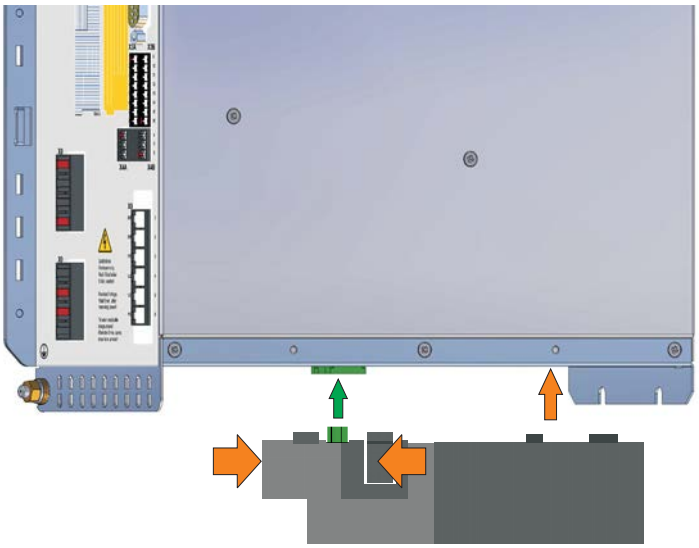

Removal:
Gently squeeze the fan casing together crosswise and pull the fan casing down.

Mounting:
Position the fan so that the green connector is aligned with the socket in the S700. Push the fan onto the connector until the fan casing clicks into place. Gently squeeze the fan casing together crosswise to check that it is fully engaged.

7 Electrical installation

7.1 Important notes

WARNING

There is a danger of electrical arcing when disconnecting connectors, because capacitors can still have dangerous voltages present up to eight minutes after switching off the supply power.
Risk of burns and blinding. The contacts become damaged.
Never undo any electrical connections to the servo amplifier while it is live. Wait at least eight minutes after disconnecting the installations from the main supply power before touching potentially live sections of the equipment (e.g. contacts) or undoing any connections.
To be sure, measure the voltage in the DC Bus link and wait until it has fallen below 60V. Control and power connections can still be live, even if the motor is not rotating.

NOTICE Wrong mains voltage, unsuitable motor or wrong wiring will damage the amplifier. Check the combination of servo amplifier and motor. Compare the rated voltage and current of the units. Implement the wiring according to the connection diagram on p. 59. Make sure that the maximum permissible rated voltage at the terminals L1, L2, L3 or +DC, –DC is not exceeded by more than 10% even in the most unfavorable circumstances (see IEC 60204-1).

NOTICE Excessively high external fusing will endanger cables and devices. The fusing of the AC supply input and 24V supply must be installed by the user, best values are given on p.30. Hints for use of Residual-current circuit breakers (FI) ⇨ p.51.

NOTICE Correct wiring is the basis for reliable functioning of the servo system.
Route power and control cables separately. We recommend a distance of at least 200mm. This improves the interference immunity. If a motor power cable is used that includes cores for brake control, the brake control cores must be separately shielded. Ground the shielding at both ends. Ground all shielding with large areas (low impedance), with metalized connector housings or shield connection clamps wherever possible. Notes on connection techniques can be found on page 60.

NOTICE Feedback lines may not be extended, since thereby the shielding would be interrupted and the signal processing could be disturbed. Lines between amplifiers and external brake resistor must be shielded. Install all cables with an adequate cross-section, as per IEC 60204 (⇨ p.31) and use the requested cable material (⇨ p. 61) to reach max. cable length.

NOTICE The servo amplifier's status must be monitored by the PLC to acknowledge critical situations. Wire the BTB/RTO contact in series into the emergency stop circuit of the installation. The emergency stop circuit must operate the supply contactor.

NOTE It is permissible to use the setup software to alter the settings of the servo amplifier. Any other alterations will invalidate the warranty.

7.2 Guide to electrical installation

The following notes should help you to carry out the electrical installation.

Cable selection

Select cables in accordance with IEC 60204 ⇨ p.31.

Grounding Shielding

For EMC-compliant shielding and grounding ⇨ p.65.
Ground the mounting plate, motor housing and CNC-GND of the control system. Notes on connection techniques ⇨ p.60.

Wiring

Note: Route power leads and control cables separately.
Wire the BTB/RTO contact in series into the emergency stop circuit of the system.

1. Connect the digital control inputs and outputs.
2. Connect the analog input source, if required.
3. Connect the feedback device.
4. Connect the expansion card
   (see corresponding notes from page 125).
5. Connect the motor cable
   Connect shielding to EMC connectors (shield connection) at both ends. Use the motor choke (3YL or 3YLN) if cable > 25 meters.
6. Connect motor-holding brake, connect shielding to EMC connector at both ends.
7. If required, connect the external brake resistor (with fusing).
8. Connect the auxiliary supply
   (maximum permissible voltage values ⇨ p.31).
9. Connect the main electrical supply
   (maximum permissible voltage values ⇨ p.31), hints for use of Residual-current circuit breakers (FI) ⇨ p.51
10. Connect the PC (⇨ p.102).

Final check

Final check of the implementation of the wiring against the wiring diagrams that have been used.

7.3 Wiring

The installation procedure is described as an example. A different procedure may be appropriate or necessary, depending on the application of the equipments.
We provide further know-how through **training courses** (on request).

DANGER

Severe electric shock injuries or death may be sustained when working on installations which have not been disconnected.
Only professional staff who are qualified in electrical engineering are allowed to install the servo amplifier.
Only install and wire up the equipment when it is not live, i.e. when neither the electrical supply nor the 24 V auxiliary voltage nor the supply voltages of any other connected equipment is switched on.
Take care that the cabinet is safely disconnected (with a lock-out, warning signs etc.). The individual voltages will be switched on for the first time during setup.

NOTE

The ground symbol ⏚, which you will find in all the wiring diagrams, indicates that you must take care to provide an electrically conductive connection with the largest feasible surface area between the unit indicated and the mounting plate in the control cabinet. This connection is for the effective grounding of HF interference, and must not be confused with the PE-symbol ⏚
(PE = protective earth, safety measure as per IEC 60204).

NOTE

Use the following connection diagrams:

Overview	: page 65
Safe Torque Off STO	: page 46
Mains power	: page 68ff
Motor	: page 74
Feedback	: page 76ff
Electronic Gearing and Master Slave	
Master-Slave	: page 93
Pulse-Direction	: page 94
Digital and analog inputs and outputs	: page 98ff
RS232 / PC connection	: page 102
CANopen Interface	: page 103
EtherNET Interface	: page 104
Expansion cards for slot 1:	
I/O-14/08	: page 128
PROFIBUS	: page 129
sercos® II	: page 131
DeviceNet	: page 132
SynqNet	: page 136
FB-2to1	: page 137
2CAN	: page 139
Expansion cards for slot 2:	
PosI/O & PosI/O-Monitor	: page 142ff
Expansion cards for slot 3:	
PosI/O & PosI/O-Monitor	: page 151ff
Safety	: page 152ff

7.3.1 Shielding connection to the front panel

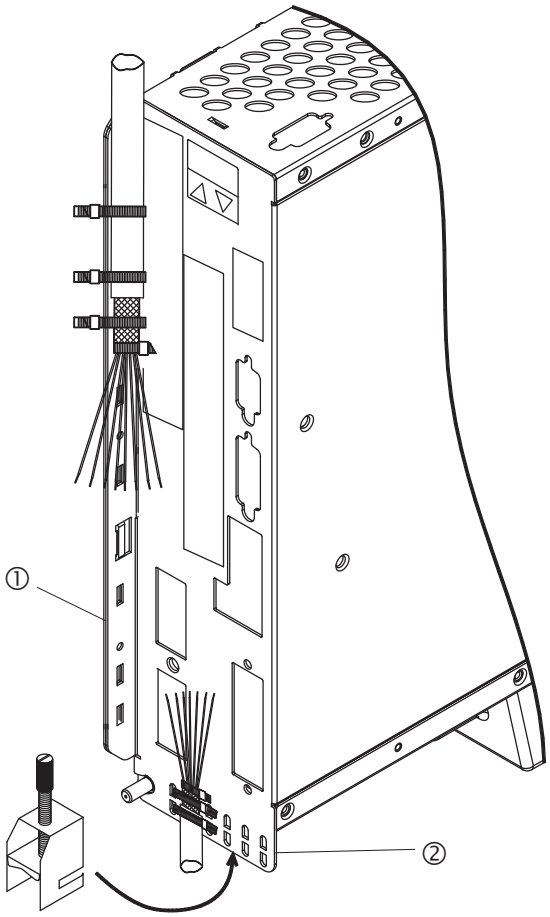

Remove the outside shroud of the cable and the shielding braid on the desired core length. Secure the cores with a cable tie.

Remove the outside shroud of the line on a length from for instance 30mm without damaging the shielding braid.

Strip all wires and fit wire end ferrules.

Use cable ties to attach the cable to the side (1) or bottom (2) shroud of the servo amplifier, securing the braided shield of the cable to the shroud of the servo amplifier with a cable tie.

Alternatively you can use shield connection terminal clamps (see accessories manual). These hook into the bottom shroud and ensure optimum contact between the shield and the shroud.

Wire the plug-in terminal blocks as shown in the connection diagram.
The motor cable shield is connected via the bottom motor connector X9 (see below).

7.3.2 Motor connector X9 with shielding connection

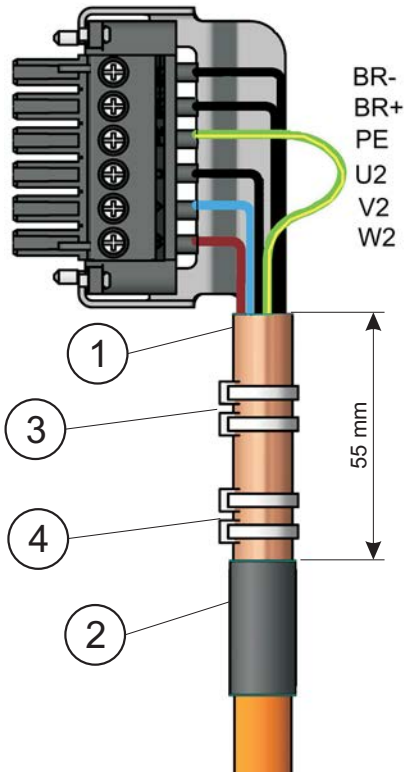

Strip the external cable sheath to a length of approx. 120 mm**, taking care not to damage the braided shield**. Push the braided shield (1) back over the cable and secure with a rubber sleeve (2) or shrink sleeve.

Shorten all the wires apart from the protective earth (PE) wire (green/yellow) by about 20 mm so that the PE wire is now the longest wire. Strip all wires and fit wire end ferrules.

Secure the braided shield of the cable to the shroud with a cable tie (3) and use a second tie (4) to fasten the cable.

Wire the connector as shown in the connection diagram. Plug in the connector to the socket on the front of the S700.

Screw the connector in place. This ensures that there is conductive contact over a large surface area between the braided shield and the front panel.

7.3.3 Technical data for connecting cables

For further information on the chemical, mechanical and electrical characteristics of the cables please refer to the accessories manual or contact our customer service.

NOTE Observe the rules in the section "Conductor cross-sections" on page 31. To reach the max. permitted cable length, you must use cable material that matches the capacitance requirements listed below.

Capacitance (phase to shield)

Motor cable	less than 150 pF/m
Feedback cable	less than 120 pF/m

Example: Motor cable

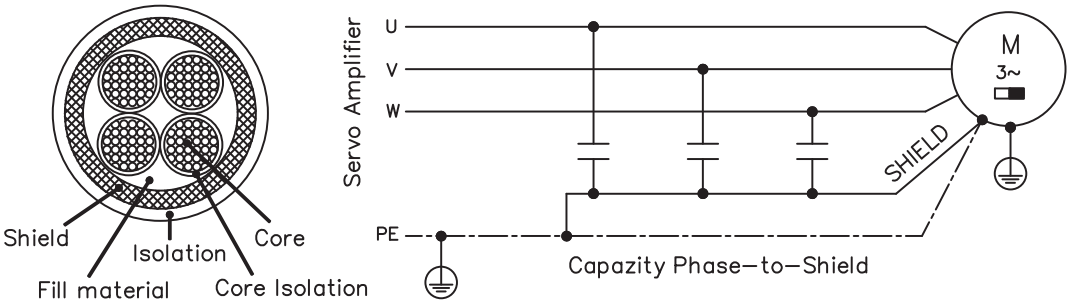

Technical data

For a detailed description of Kollmorgen cable types and how to assemble them, please refer to the accessories manual.

NOTE Motor cables longer than 25m require the use of a motor choke 3YL or 3YLN.

7.4 Components of a servo system

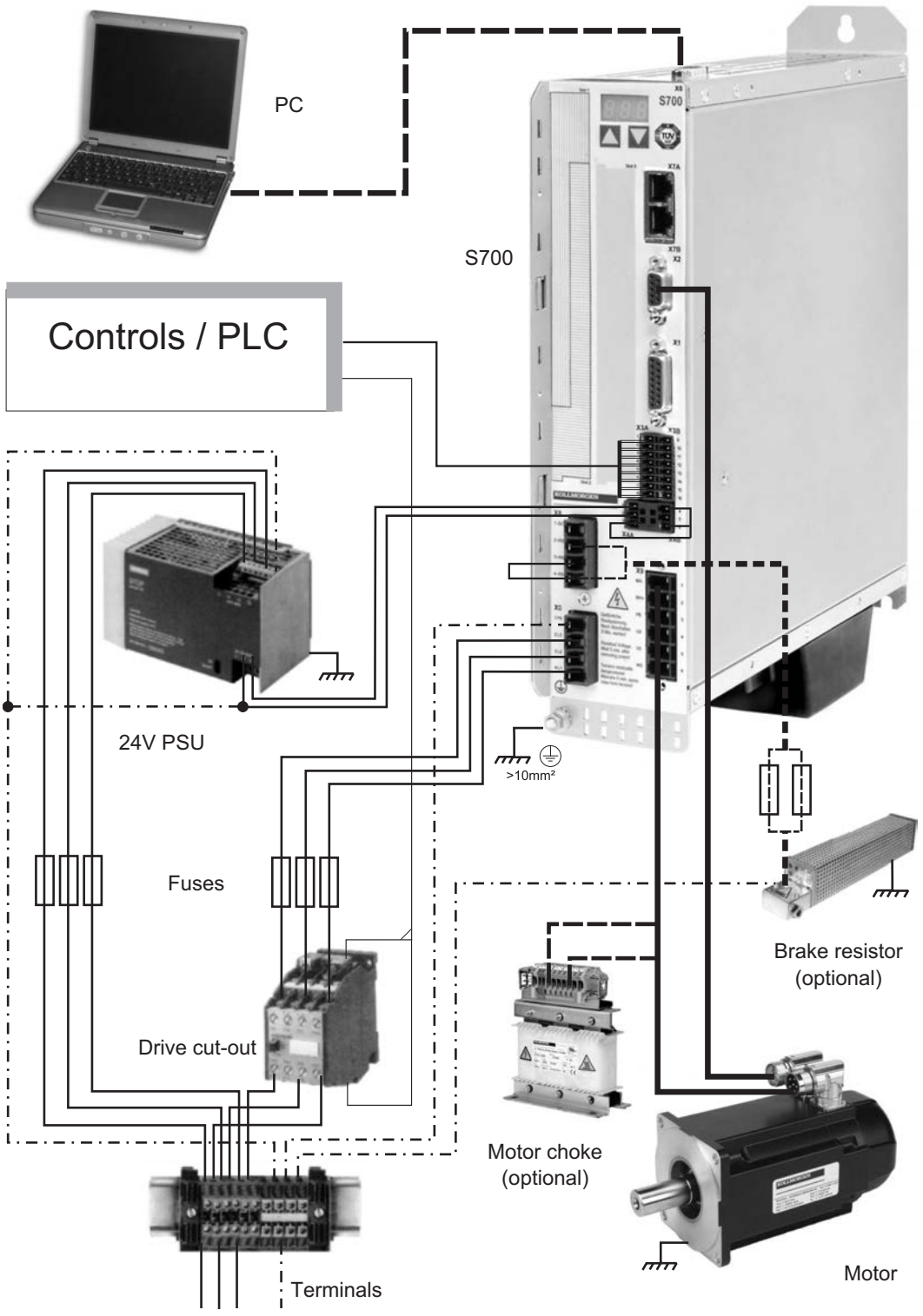

NOTE Cables drawn bold are shielded. Electrical ground is drawn with dash-dotted lines. Optional devices are connected with dashed lines to the servo amplifier. The required accessories are described in our accessories manual. STO function is deactivated in the example.

7.5 Block diagram

The block diagram below just provides an overview.

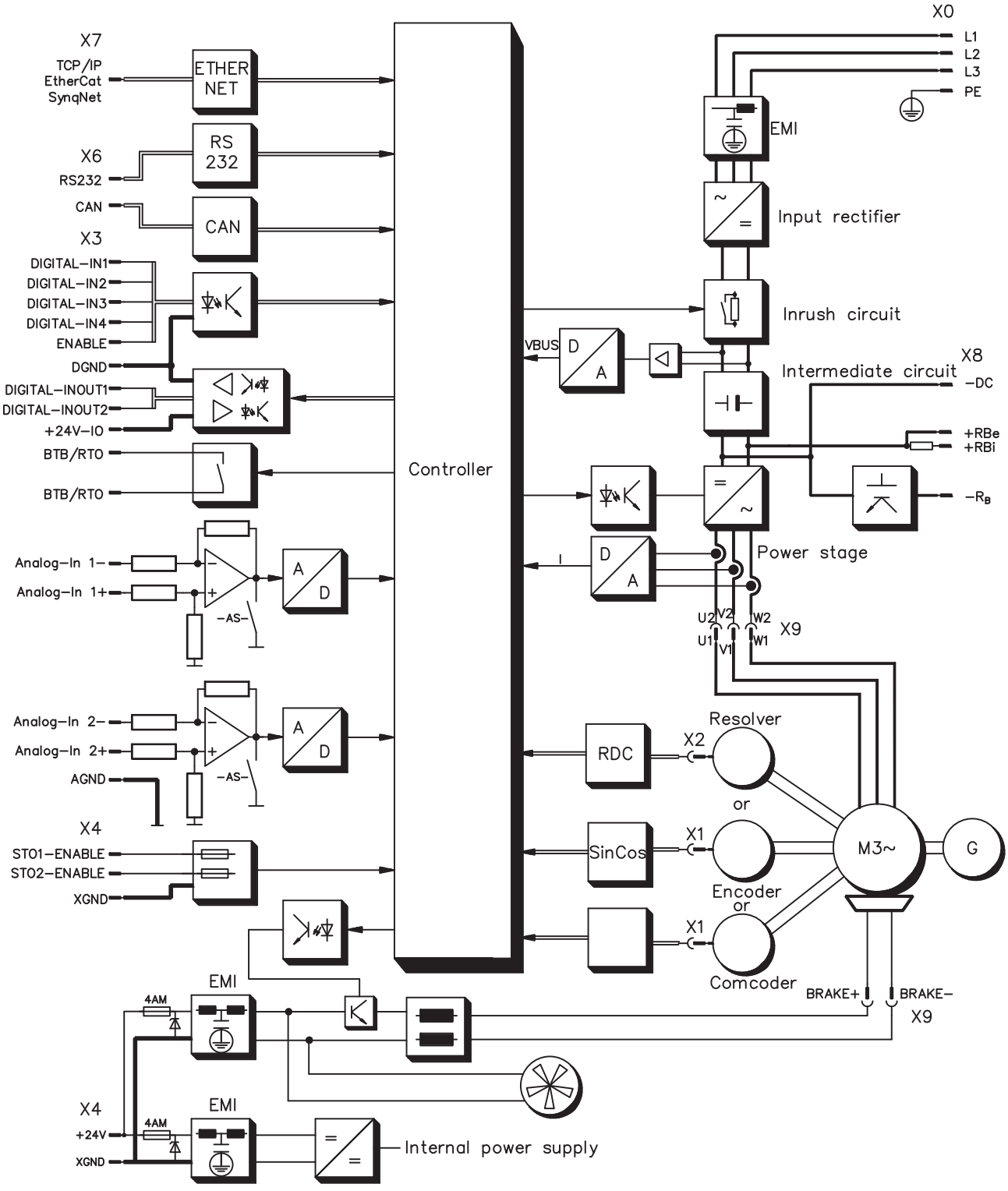

7.6 Connector assignments

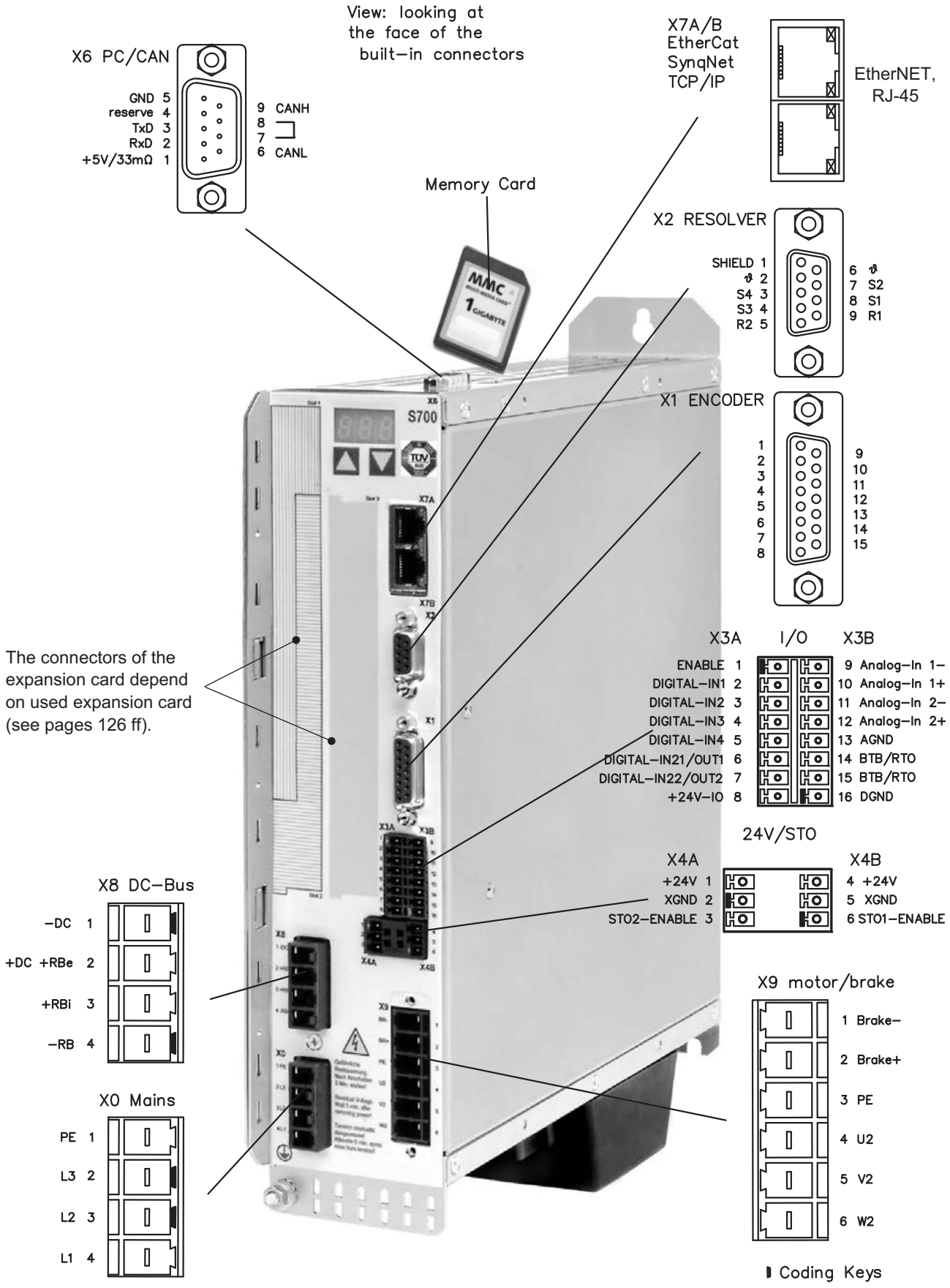

7.7 Connection diagram (Overview)

Reference Safety Instructions (⇨ p.10) and Use As Directed (⇨ p.12) !

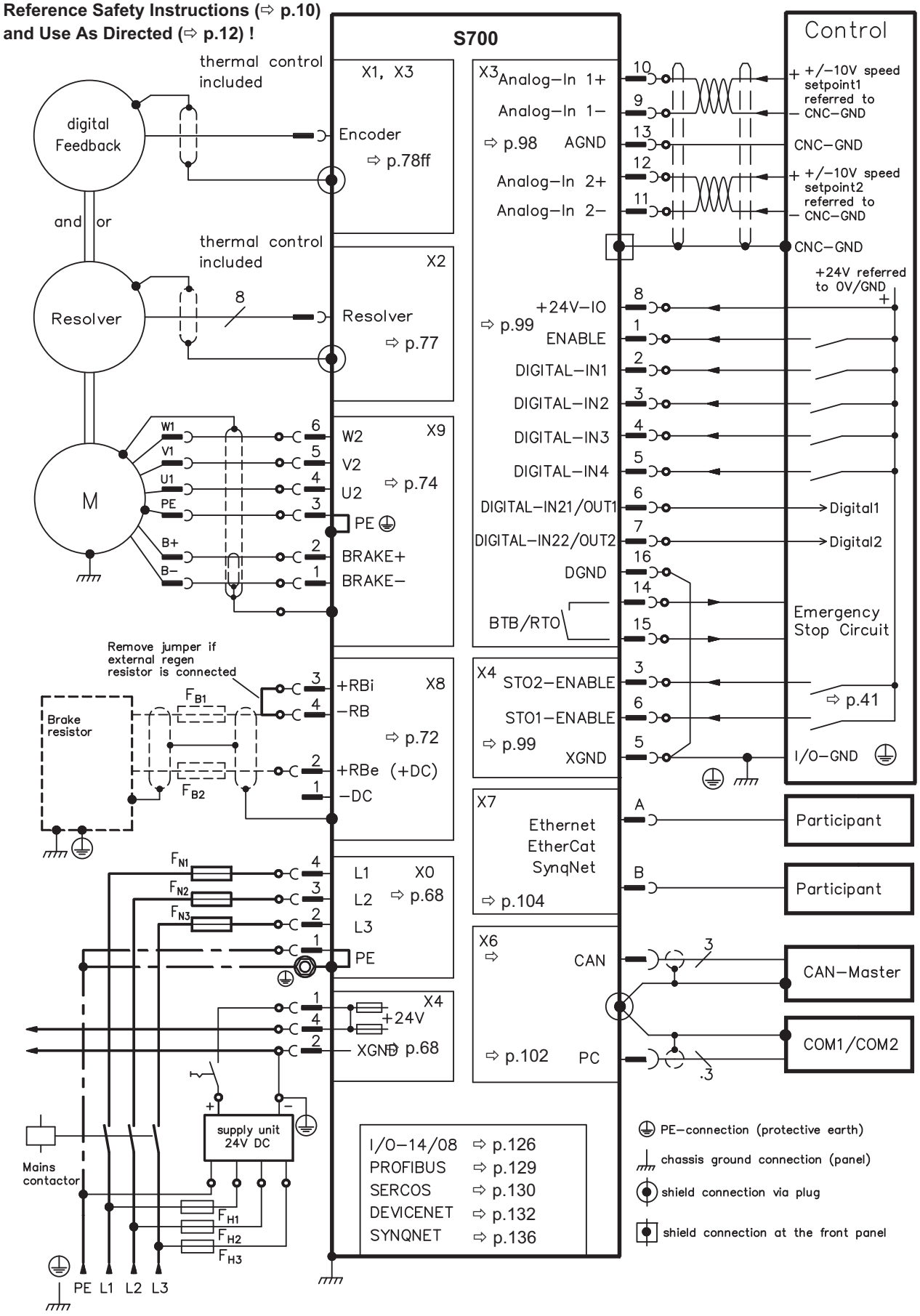

7.8 Electrical supply

7.8.1 Connection to various mains supply networks

WARNING

There is a danger of electrical shock with serious personal injury or death if the servo amplifier isn't properly grounded. An isolating transformer is required for 400V to 480V networks that are asymmetrically grounded or not grounded as shown below.

7.8.1.1 S7xx0 types

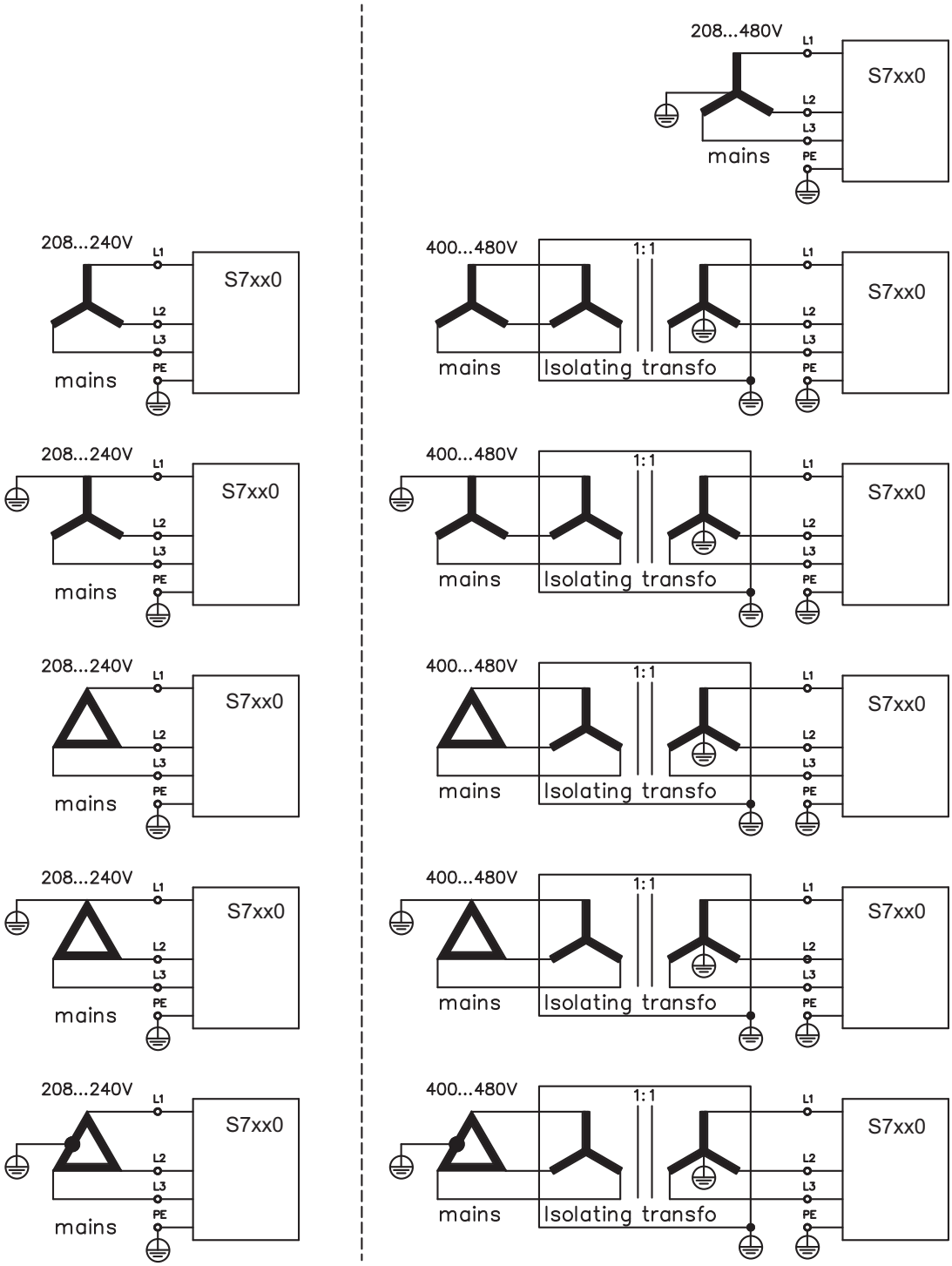

7.8.1.2 S7xx6 types

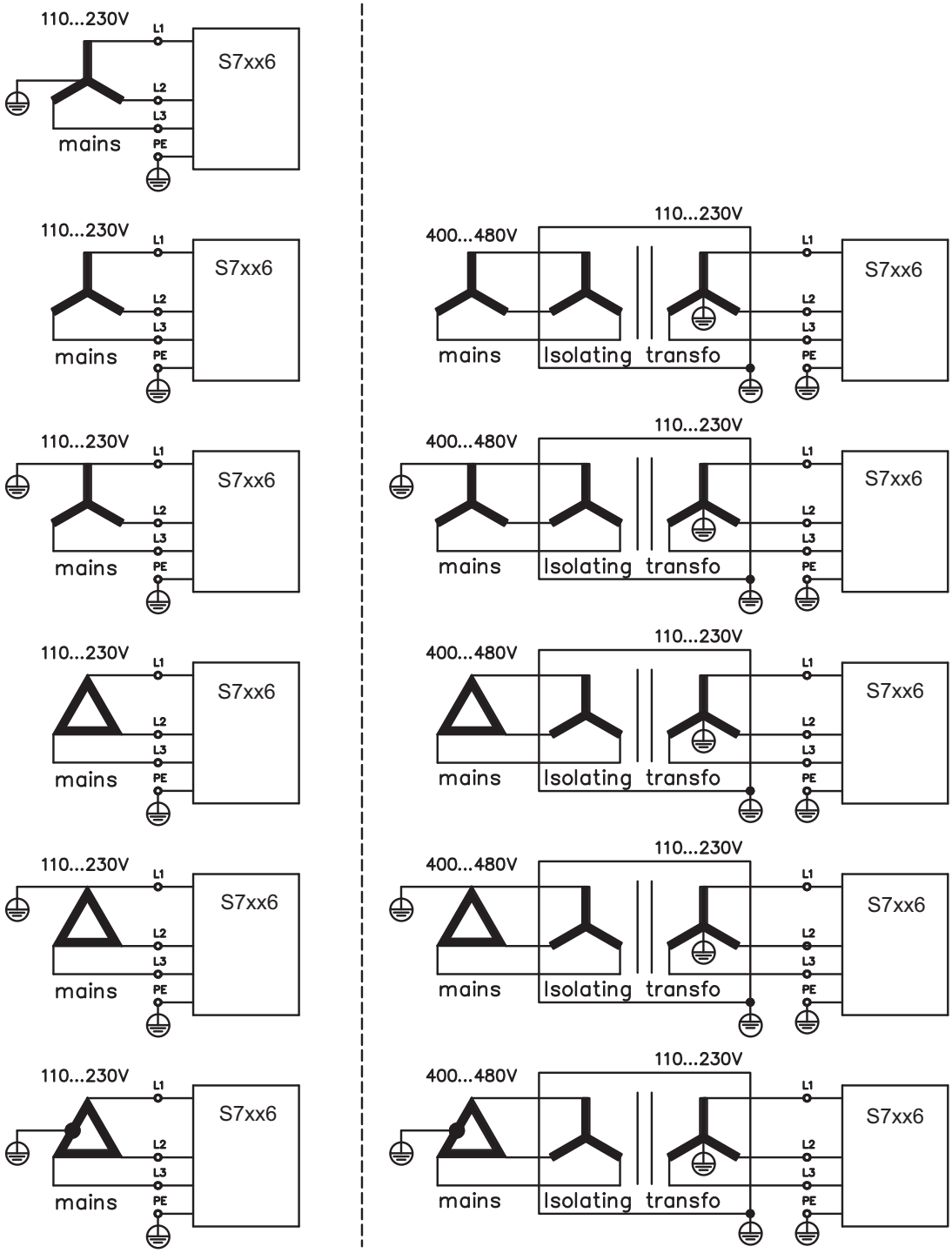

7.8.2 24V auxiliary supply (X4)

— External 24V DC power supply, electrically isolated, e.g. via an isolating transformer
— Required current rating ⇨ p.28
— Integrated EMC filter for the 24V auxiliary supply

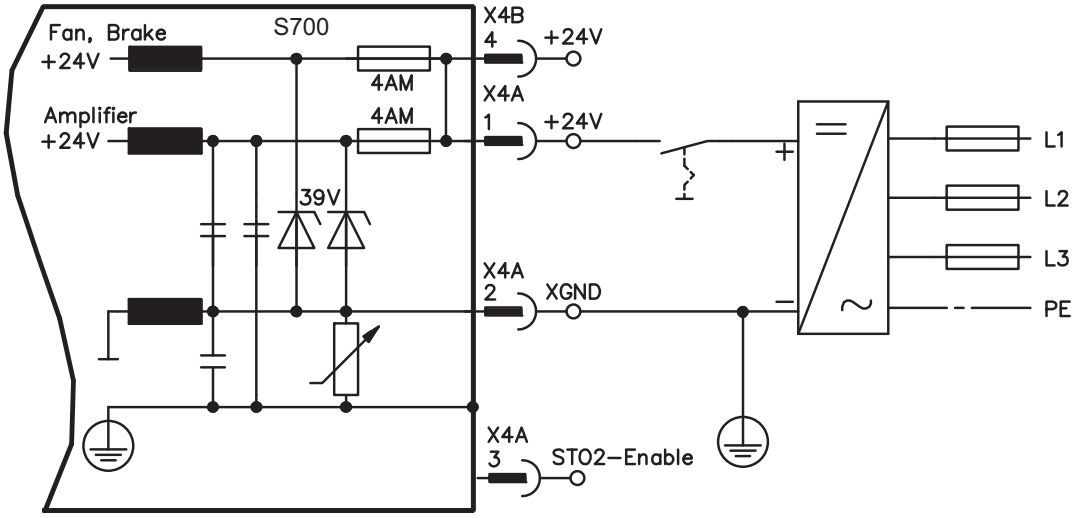

7.8.3 Mains supply connection (X0), three phase

— Directly to 3-phase supply network, filter is integrated, supply networks ⇨ p.66
— Fusing (e.g. fusible cut-outs) to be provided by the user ⇨ p.30

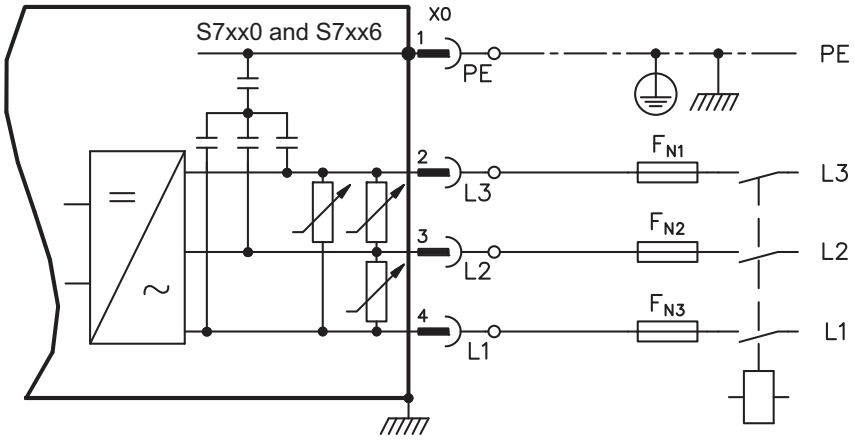

7.8.4 Mains supply connection (X0), two phase without neutral

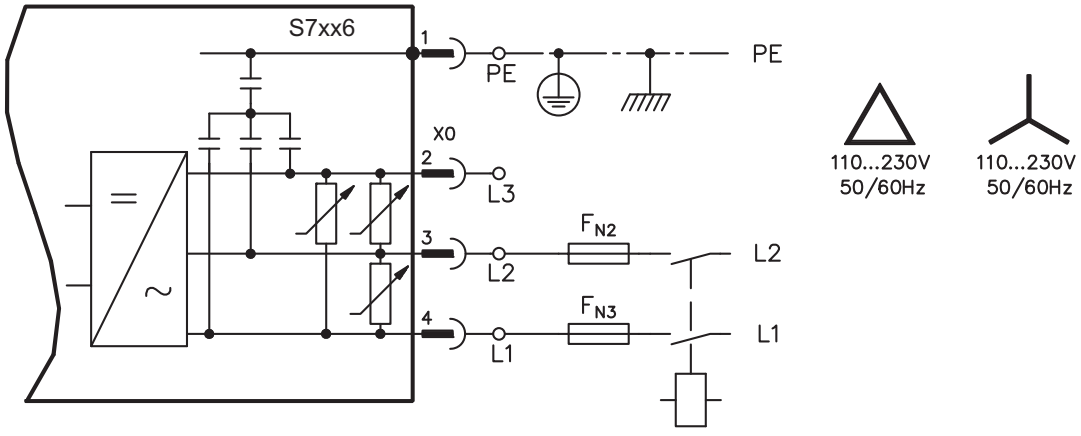

7.8.5 Mains supply connection (X0), single phase with neutral

The S700 with 230V version (S7xx6) can be operated with a single phase mains supply. In single phase operation the electrical power of the amplifier is limited.

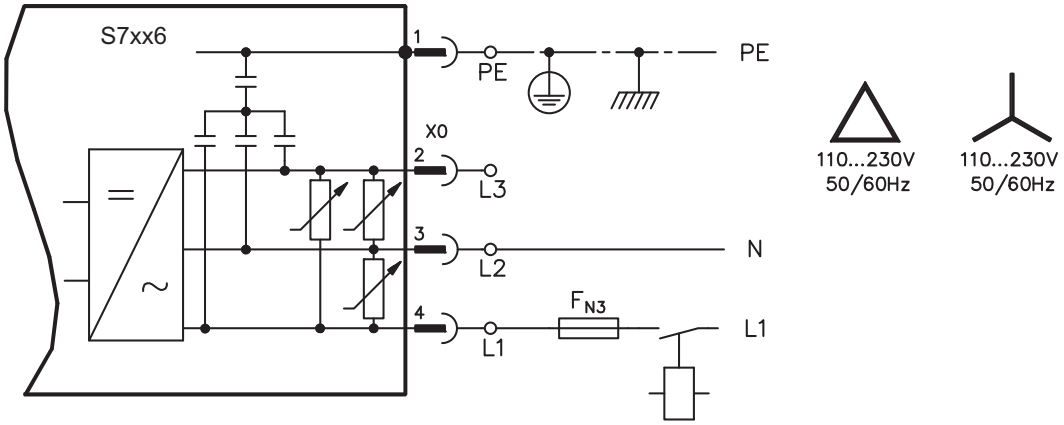

The table below shows the maximum rated power (Pn) and peak power (Pp) with single phase operation:

max. electrical power	S7016		S7036		S7066		S7126		S7246	
	Pn/W	Pp/W	Pn/W	Pp/W	Pn/W	Pp/W	Pn/W	Pp/W	Pn/W	Pp/W
VBUSBAL0 (110V)	200	400	400	400	800	800	950	950	1300	1300
VBUSBAL1 (230V)	400	1200	800	2400	1600	3200	2200	3300	3000	3500

The maximum possible current depends on the motor torque constant k_T and on the maximum speed of the connected motor:

Continuous currrent: $I_{rms} = \frac{P_n \cdot 60}{2 \cdot \pi \cdot k_T \cdot n}$ peak current: $I_{peak} = \frac{P_p \cdot 60}{2 \cdot \pi \cdot k_T \cdot n}$

NOTE

Speed can be limited with the ASCII parameter VLIM to reach the necessary current for the required torque.

With a special motor type (k_T = constant depending on the motor type) the possible output current depending on speed is similar to the diagram below:

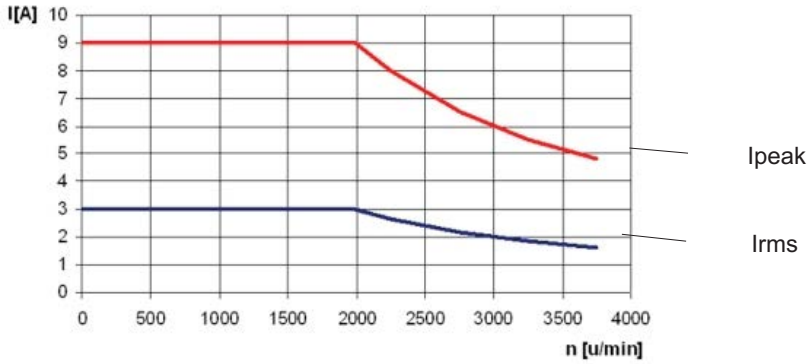

7.9 DC bus link (X8)

Terminals X8/1 (-DC) and X8/2 (+RBe). Can be connected in parallel, whereby the brake power is divided between all the amplifiers that are connected to the same DC bus link circuit. With the optional Y-connector X8Y you can connect more than one S700 to the DC bus or connect an additional external brake resistor.

In case of mains supply from the same mains (VBUSBAL must be identical with all devices on the same DC bus) these servo amplifiers may be connected by the DC bus link :

	S701-724 with HWR* < 2.00	S701-724 with HWR* ≥ 2.00	S748/S772	S300	AKD
S701-724 with HWR* < 2.00	yes	no	no	no	no
S701-724 with HWR* ≥ 2.00	no	yes	no	yes	no

*HWR = Hardware Revision (check nameplate)

NOTICE

- The servo amplifiers can be destroyed, if DC bus link voltages are different. Only servo amplifiers with mains supply from the same mains (identical mains supply voltage) may be connected by the DC bus link.
- The sum of the rated currents for all of the servo amplifiers connected in parallel to an S700 must not exceed 48A.
- Use 6mm², unshielded single cores with a max. length of 200mm; use 6mm² shielded cables for longer lengths. In this case no fuse for line protection is required.
- Servo amplifiers working generatively very often, should be placed beside amplifiers, which need energy. That reduces current flow on longer distances.

Fusing information are explained in detail in the "Product Wiki", available at www.wiki-kollmorgen.eu, on the WIKI page "DC Bus link in parallel".

Wiring example with external brake resistor

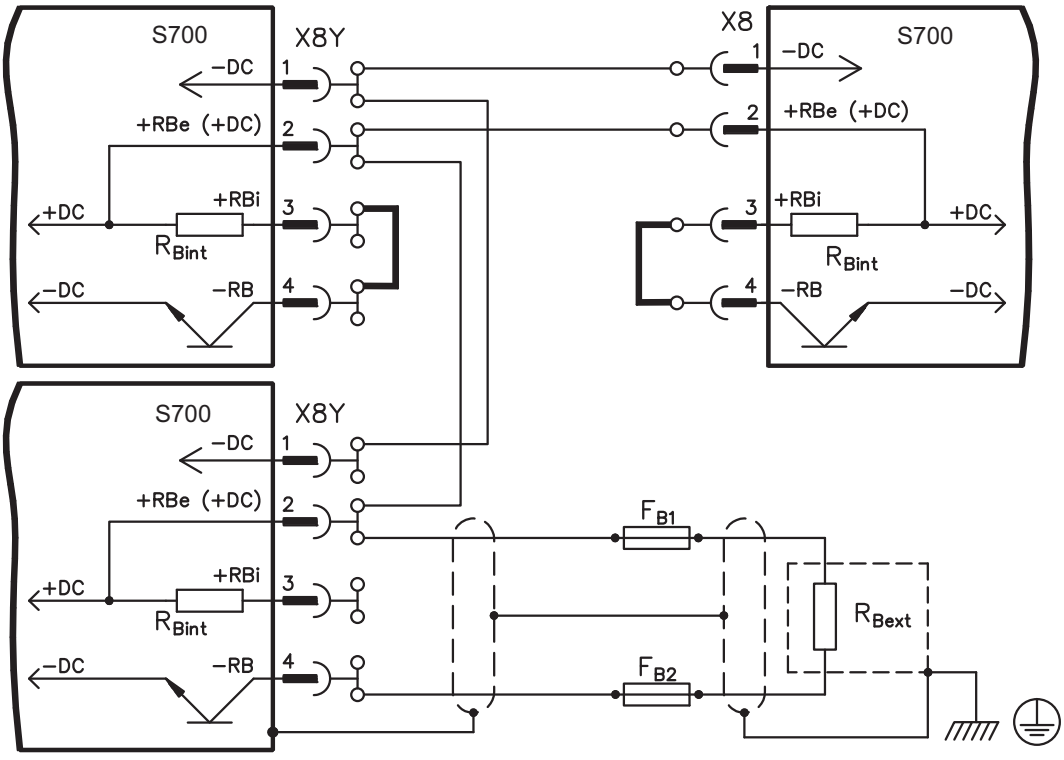

7.9.1 DC Bus topology

Fuse types see section "Fuses" on page 30. More information can be found on page Fuses in the Product-WIKI.

Connection with Y connectors

The sum of the rated currents for all of the servo amplifiers connected in parallel to an S700 must not exceed 48 A. If, based on this, the upper current limit is not exceeded, this amplifier (with 6 mm² connections) can be connected using a Y connector.

Without intermediate circuit fuses, other devices can become damaged or destroyed if, for example, a device fails due to an internal short circuit. If multiple amplifiers are connected in parallel, then it is usual to insert intermediate circuit fuses between groups of amplifiers (with a group consisting of two or three devices, depending on the strength of the current) in order to limit any possible consequential damage. Fuses cannot avoid damage by current peaks completely.

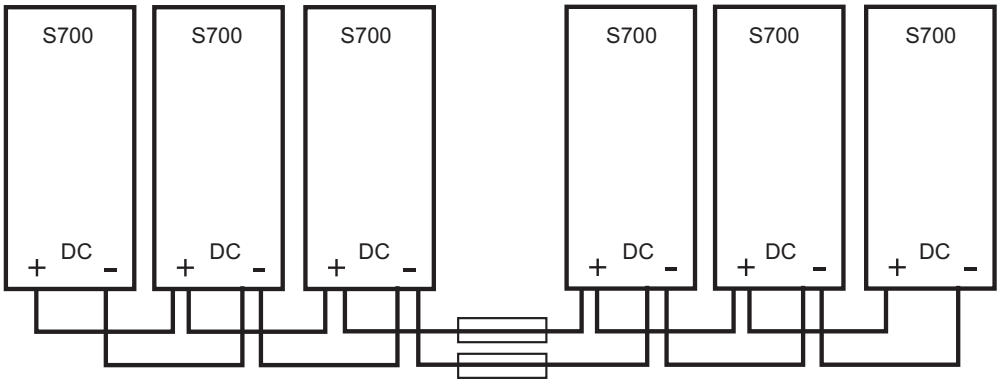

Connection with busbars

This wiring does not require Y joints. If a device fails due to a short-circuit, only its intermediate fuses are tripped and the rest of the network continues uninterrupted. The relatively solid busbars can conduct significantly larger currents, because the compensating current does not flow through the connector as above. For this reason, almost as many servo amplifiers as desired can be connected in parallel in this form. This arrangement is frequently also useful for connecting capacitor modules.

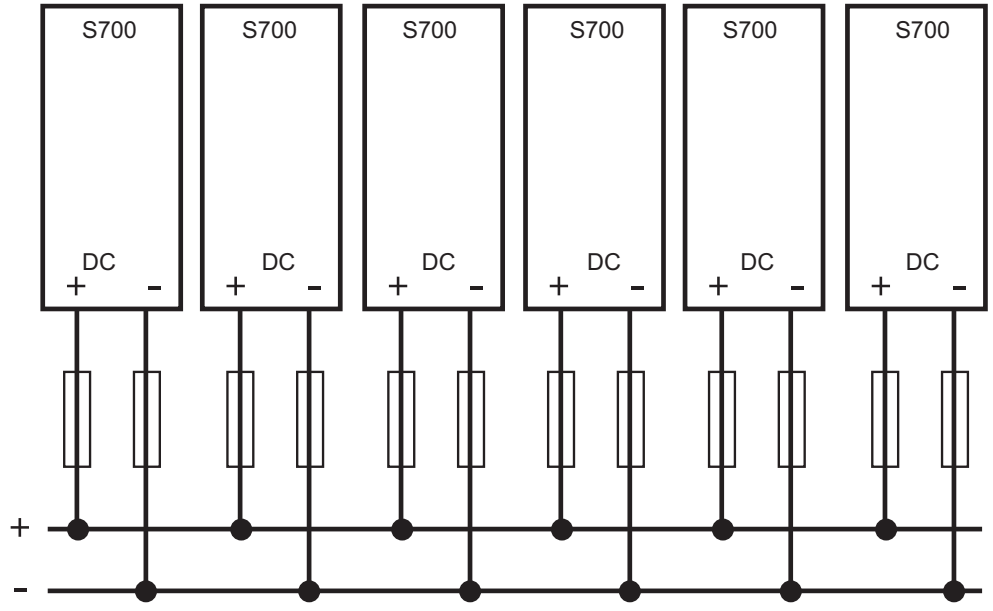

7.9.2 External brake resistor (X8)

Remove the plug-in link between the terminals X8/4 (-RB) and X8/3 (+Rbi). Fuse types see p. 30. Information for brake circuit and technical data can be found on page 33. Use the optional Y-connector X8Y (set with X4Amini for better assembly, see order numbers on p.161), if you want to link the DC bus with other S700 servo amplifiers. A wiring example with Y-connectors can be found on p.70.

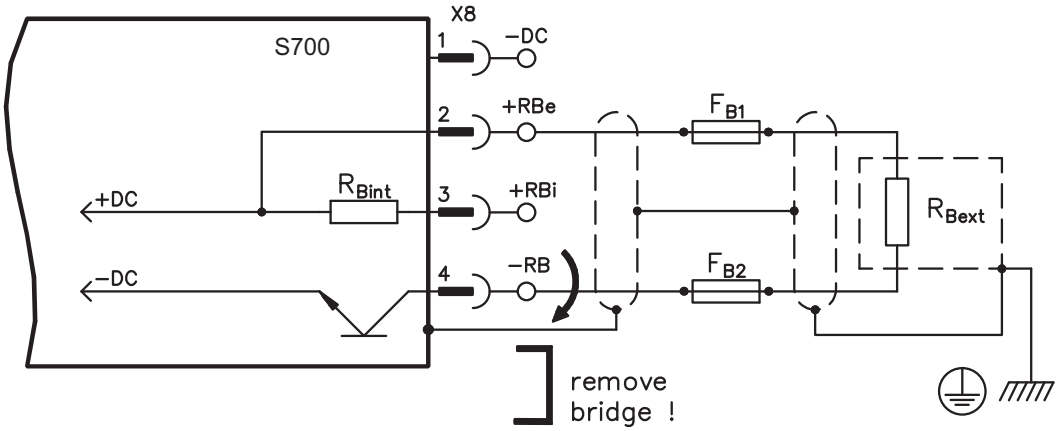

7.9.3 Capacitor Module KCM (X8)

KCM modules (**K**OLLMORGEN **C**apacitor **M**odules) absorb energy generated by the motor when it is operating in generator mode. Normally, this energy is dissipated as waste via brake resistors. KCM modules, however, feed the energy they have stored back into the DC Bus link as and when it is required.
Dimensions (HxWxD) : 300x100x201 mm

KCM-S	**S**aves energy: The energy stored in the capacitor module during regenerative braking is available the next time acceleration happens. The module's inception voltage is calculated automatically during the first load cycles.
KCM-P	**P**ower in spite of power failure: If the power supply fails, the module provides the servo amplifier with the stored energy that is required to bring the drive to a standstill in a controlled manner (this only applies to the power supply voltage; battery-back the 24 V supply separately).
KCM-E	**E**xpansion module for both applications. Expansion modules are available in two capacitance classes.

NOTE The KCM modules can be connected to S7010 ... S7240 devices (mains supply voltage 400/480V, rated current max. 24A). Information for mounting, installation and setup can be found in the KCM Instructions Manual.

Technical Data of KCM Modules

Type	Storage capacity [Ws]	Rated supply voltage [V DC]	Peak supply voltage [V DC]	Power [kW]	Protection class	Inception voltage [V DC]	Weight [kg]
KCM-S200	1600	max. 850 VDC	max. 950 VDC (30s in 6min)	18	IP20	evaluated	6,9
KCM-P200	2000					470 VDC	6,9
KCM-E200	2000					-	4,1
KCM-E400	4000					-	6,2

Wiring example KCM Modules

NOTICE

Maximum cable length between servo amplifier and S700 module: 500 mm.
Twist the cables +DC/-DC. Longer cable lengths require shielding. Ensure that the polarity is correct; swapping round DC+/DC- will destroy the KCM modules.

DANGER

DC Bus link terminals in servo systems carry high DC voltage of up to 900 V. Touching the terminals while they are carrying voltage is extremely dangerous. Switch off (disconnect) the line voltage. You must only work on the connections when the system is disconnected.
It can take over an hour for the modules to self-discharge. Check the state of charge with a measuring device that is suitable for a DC voltage of up to 1,000 V. When measuring a voltage of over 60 V between the DC+/DC- terminals or to ground, wait some minutes and measure again or discharge the modules as described in the KCM instructions manual.

KCM-S: Connect the BR connection to the S700 with the most frequent regenerative braking processes in the system. This S700 must have an active internal or external brake resistor. For setup, enable the S700 and operate the driving profile that causes the brake chopper to respond. The KCM-S determines the chopper threshold and begins to charge; LED flashes. The energy stored is available the next time acceleration happens.

KCM-P: The KCM-P begins the charging process at approx. 470 V DC; the LED flashes. If the power supply fails, the module provides the servo amplifier with the stored energy that is required to bring the drive to a standstill in a controlled manner (this only applies to the power supply voltage; battery-back the 24 V supply separately).

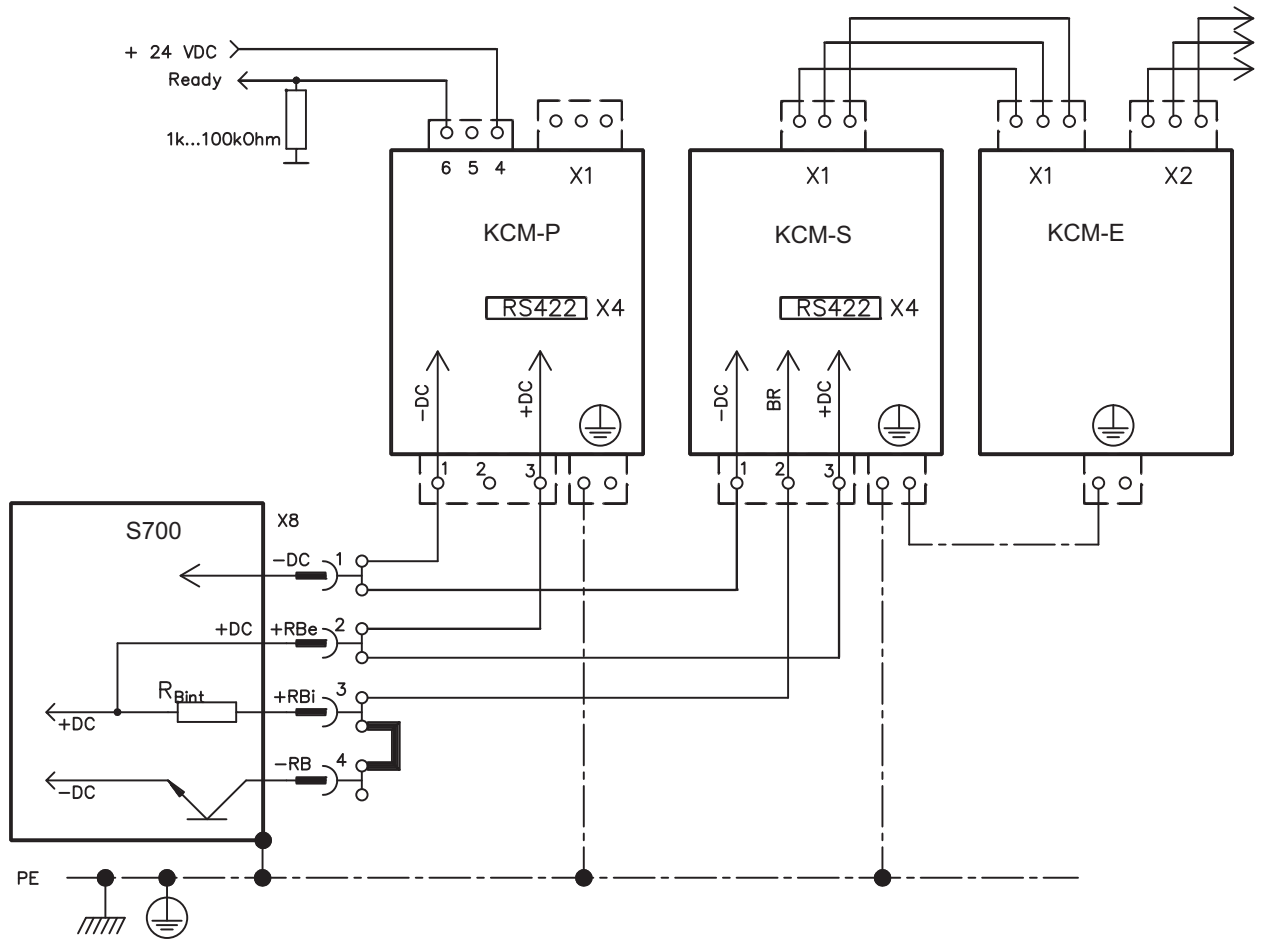

7.10 Motor and holding brake connection (X9)

Together with the motor supply cable and motor winding, the power output of the servo amplifier forms an oscillating circuit. Characteristics such as cable capacity, cable length, motor inductance, frequency and voltage rise speed (see Technical Data, p. 28) determine the maximum voltage in the system.

NOTICE

The dynamic voltage rise can lead to a reduction in the motor's operating life and, on unsuitable motors, to flash overs in the motor winding.
— Only install motors with insulation class F (acc. to IEC 60085) or above
— Only install cables that meet the requirements on p.31 and p.61.

CAUTION

The brake function does not ensure functional safety! Danger by falling load (in case of suspended load, vertical axes). An additional mechanical brake is required for functional safety, which must be safely operated, e.g. via the Safety Card S1-2 (see p. 155).

Wiring with cable length ≤ 25m

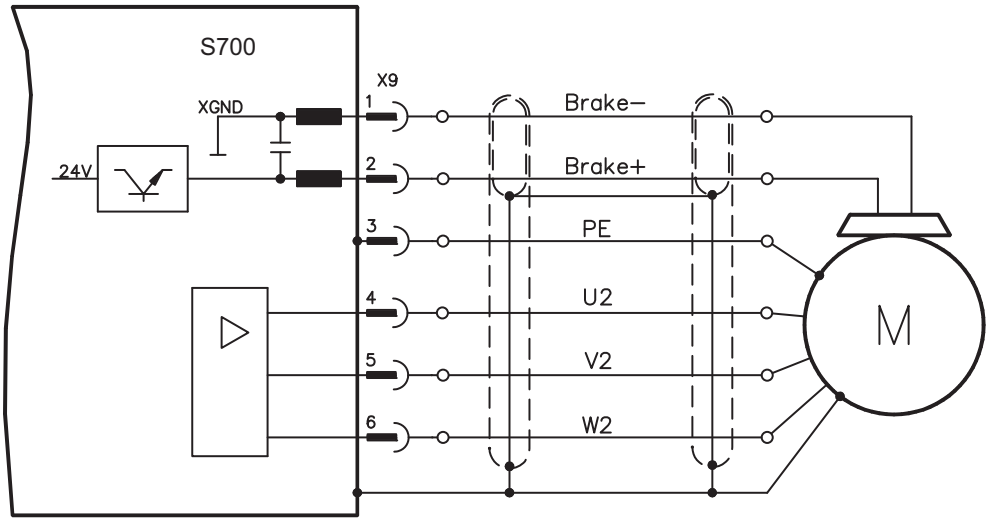

Wiring with cable length >25m

NOTICE

With long motor cables leakage currents endanger the output stage of the servo amplifier. For cable lengths above 25m up to max. 50m, the motor choke 3YL or 3YLN (see accessories manual) must be wired into the motor cable, close to the amplifier.

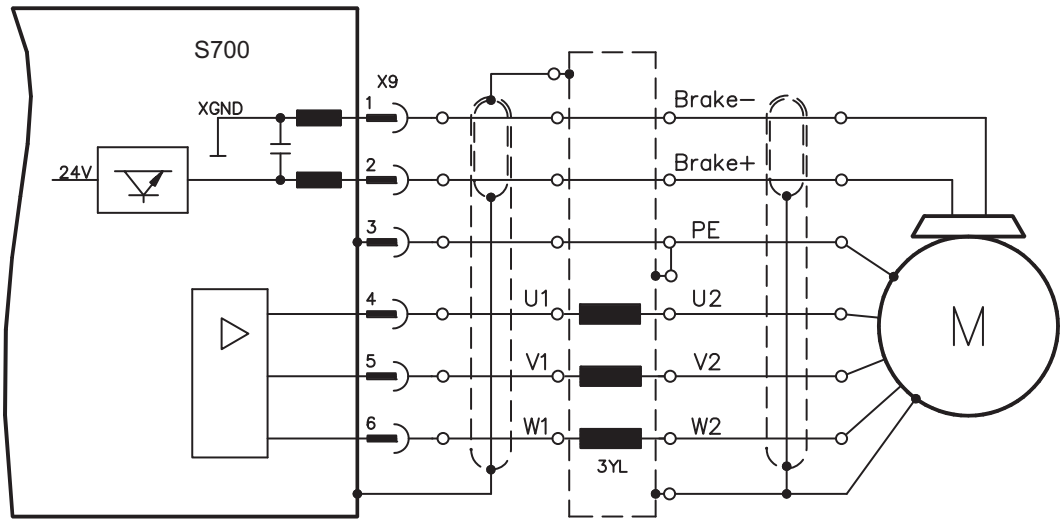

7.11 Feedback systems

Every closed servo system will normally require at least one feedback device for sending actual values from the motor to the servo drive. Depending on the type of feedback device used, information will be fed back to the servo amplifier using digital or analog means. Up to three feedback devices can be used at the same time. S700 supports the most common types of feedbacks whose functions must be assigned with the parameters

FBTYPE (DRIVEGUI.EXE screen page FEEDBACK), primary Feedback (⇨ p.76ff)

EXTPOS (screen page POSITION CONTROLLER), secondary position Feedback (⇨ p.76ff)

GEARMODE (screen page ELECTRONIC GEARING), encoder control (⇨ p.93ff)

in the setup software. Scaling and other settings must always be made here.

For a detailed description of the ASCII parameters, please refer to the online help of the setup software.

Some possible configurations

Motor Feedback

Motor Feedback & External Position Feedback

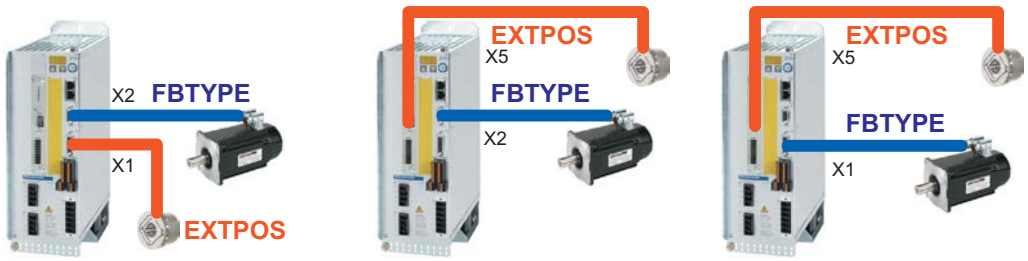

Motor Feedback & Master Slave

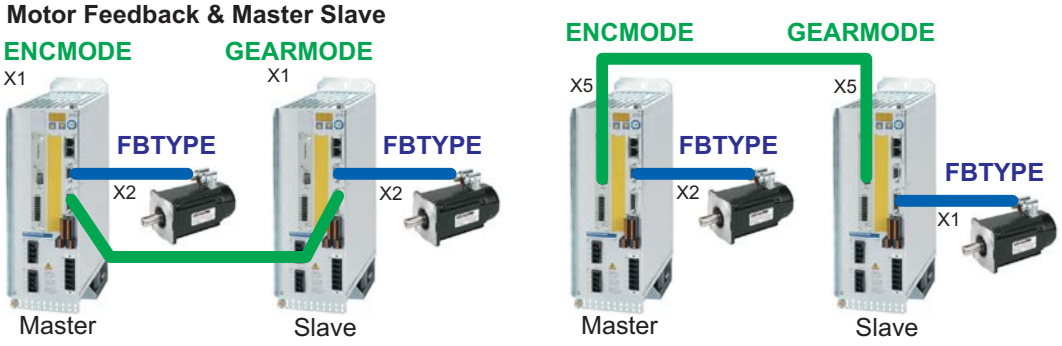

Motor Feedback & Master Slave & External Position Feedback

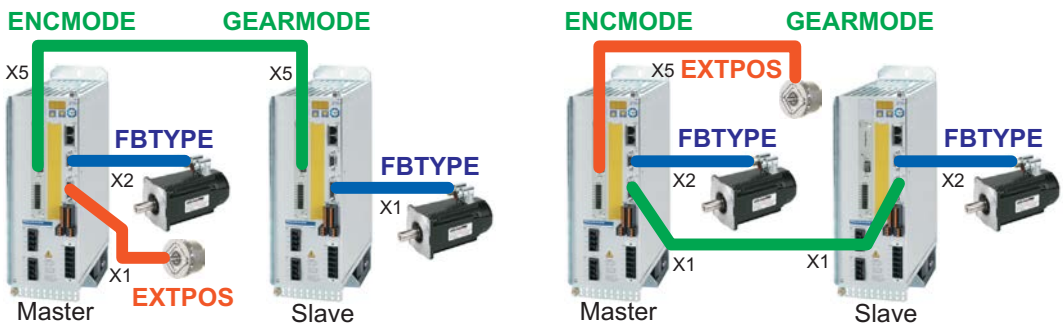

7.12 Primary and secondary feedback types

The table below provides an overview of the supported feedback types, their corresponding parameters and a reference to the relevant connection diagram in each case.
FBTYPE (DRIVEGUI.EXE screen page FEEDBACK), primary Feedback
EXTPOS (screen page POSITION CONTROLLER), secondary Feedback
For a detailed description of the ASCII parameters, please refer to the online help of the setup software.

			primary	secondary
Feedback type	**Connector**	**Wiring diagram**	**FBTYPE**	**EXTPOS**
Resolver	X2	⇨ p.77	0	-
SinCos Encoder BiSS (B) analog	X1	⇨ p.78	23,24	-
Encoder BiSS (C[2)]) digital	X1	⇨ p.79	20,22,33	11, 12
SinCos Encoder ENDAT 2.1	X1	⇨ p.80	4, 21	8
Encoder ENDAT 2.2	X1	⇨ p.81	32, 34	13
SinCos Encoder HIPERFACE	X1	⇨ p.82	2	9
SinCos Encoder SSI (linear)	X1	⇨ p.83	26[1)]	-
SinCos Encoder w/o data channel	X1	⇨ p.84	1, 3, 7, 8	6, 7
SinCos Encoder + Hall	X1	⇨ p.85	5, 6	-
ROD* 5V without zero, 1.5MHz	X1	⇨ p.86	30, 31	30
ROD (AquadB) 5V with zero, 350kHz	X1	⇨ p.87	17, 27	10
ROD (AquadB) 5V with zero + Hall	X1	⇨ p.88	15	-
ROD (AquadB) 24V without zero	X3	⇨ p.89	12, 16	2
ROD (AquadB) 24V without zero + Hall	X3/X1	⇨ p.90	14	-
SSI	X1	⇨ p.91	25[1)]	25[1)]
Hall	X1	⇨ p.92	11	-
Step/Direction 24V	X3	⇨ p.94	-	1
Sensorless (operation w/o Feedback)	-	-	10	-
with expansion card "PosI/O" or "PosI/O-Monitor"				
ROD (AquadB) 5V with zero	X5	⇨ p.143	13[1)], 19[1)]	3
ROD (AquadB) 5V with zero + Hall	X5/X1	⇨ p.144	18	-
SSI	X5	⇨ p.145	9[1)]	5[1)]
SinCos Encoder SSI (linear)	X5/X1	⇨ p.146	28	-
Step/Direction 5V	X5	⇨ p.147	-	4

* ROD is an abbreviation for “incremental encoder”.
[1)] Switch on the encoder supply voltage on X1: set ENCVON to 1
[2)] BiSS C support for Renishaw encoders, Hengstler encoders are not supported.

NOTE The expansion card FB2to1 (see p. 137) enables simultaneous connection of a digital primary feedback and of an analog secondary feedback to the connector X1.

7.12.1 Resolver (X2)

Connection of a Resolver (2 to 36-poles) as a feedback system (primary, ⇨ p.76). The thermal control in the motor is connected via the resolver cable to X2 and evaluated there.

If cable lengths of more than 100m are planned, please consult our customer service.

FBTYPE: 0

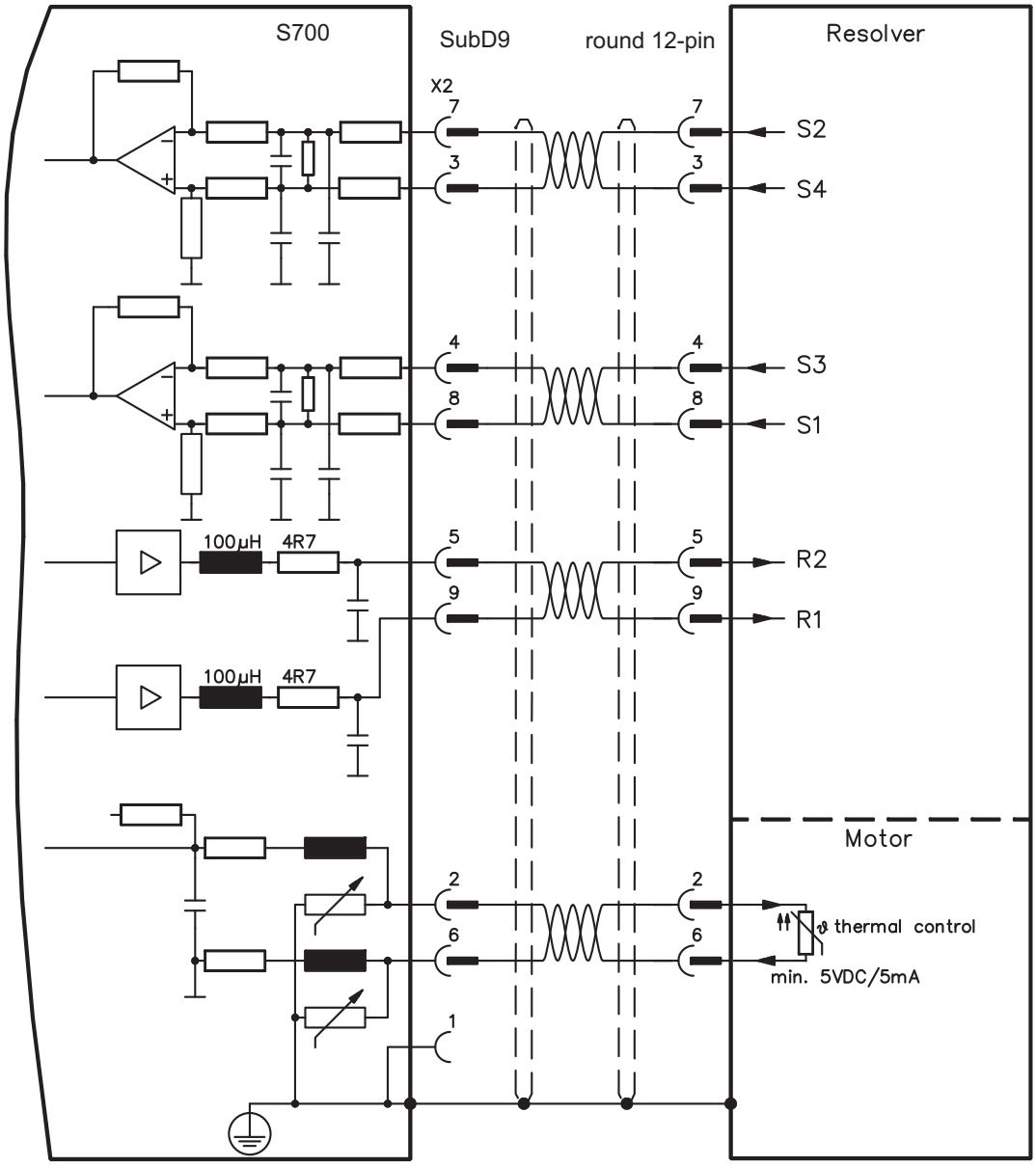

The pin assignment shown on the encoder side relates to the Kollmorgen motors.

7.12.2 Sine Encoder with BiSS analog (X1)

Wiring of a single-turn or multi-turn sine-cosine encoder with BiSS interface as a feedback system (primary and secondary, ⇨ p.76).

The thermal control in the motor is connected via the encoder cable to X1 and evaluated there. All signals are connected using our pre-assembled encoder connection cable. If cable lengths of more than 50m are planned, please consult our customer service.

Frequency limit (sin, cos): 350 kHz

Type	FBTYPE	EXTPOS	GEARMODE	Up
5V analog (BiSS B)	23	-	-	5V +/-5%
12V analog (BiSS B)	24	-	-	7,5...11V

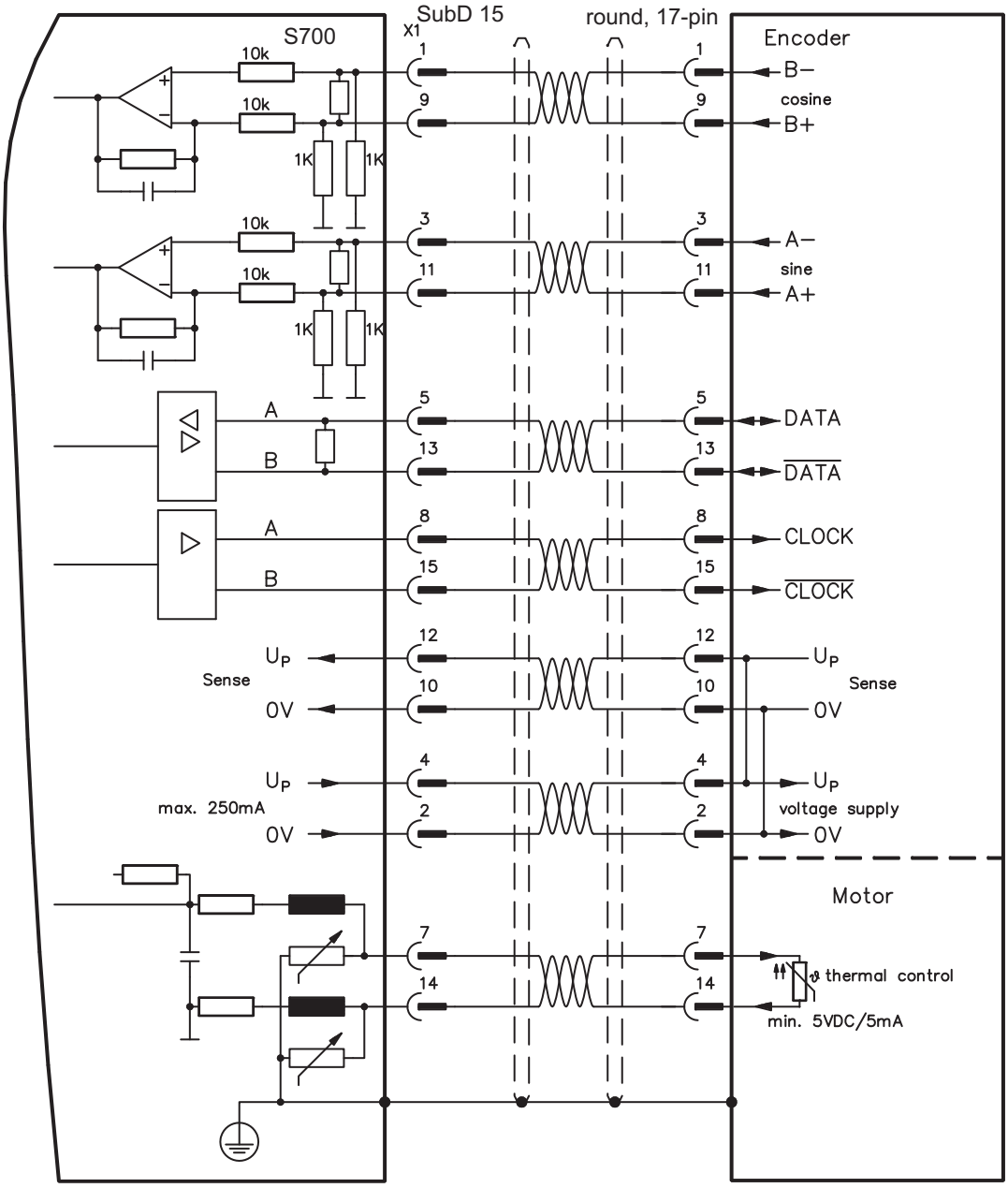

The pin assignment shown on the encoder side relates to the Kollmorgen motors.

7.12.3 Encoder with BiSS digital (X1)

Wiring of a single-turn or multi-turn digital encoder with BiSS interface as a feedback system (primary and secondary, ⇨ p.76).

The thermal control in the motor is connected via the encoder cable to X1 and evaluated there. All signals are connected using our pre-assembled encoder connection cable. If cable lengths of more than 50m are planned, please consult our customer service.

Frequency limit: 1,5MHz

Type	FBTYPE	EXTPOS	GEARMODE	Up
5V digital (BiSS B)	20	11	11	5V +/-5%
12V digital (BiSS B)	22	11	11	7,5...11V
5V digital (BiSS C, Renishaw)	33	12	12	5V +/-5%

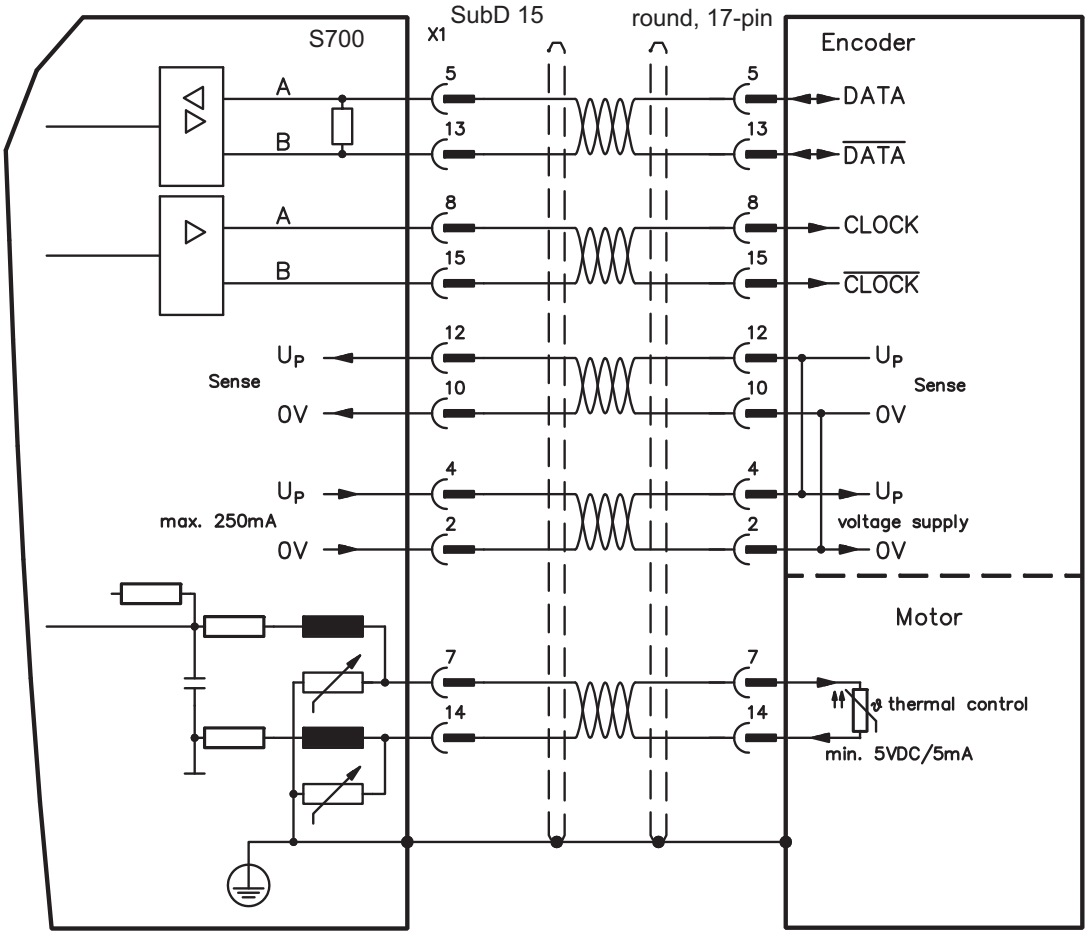

The pin assignment shown on the encoder side relates to the Kollmorgen motors.

7.12.4 Sine Encoder with EnDat 2.1 (X1)

Wiring of a single-turn or multi-turn sine-cosine encoder with EnDat 2.1 interface as a feedback system (primary and secondary, ⇨ p.76). Preferred types are the optical encoder ECN1313 / EQN1325 and the inductive encoder ECI 1118/1319 or EQI 1130/1331. The thermal control in the motor is connected via the encoder cable to X1 and evaluated there. All signals are connected using our pre-assembled encoder connection cable. If cable lengths of more than 50m are planned, please consult our customer service. Frequency limit (sin, cos): 350 kHz

Type	FBTYPE	EXTPOS	GEARMODE
ENDAT 2.1	4	8	8
ENDAT 2.1 + Wake&Shake	21	8	8

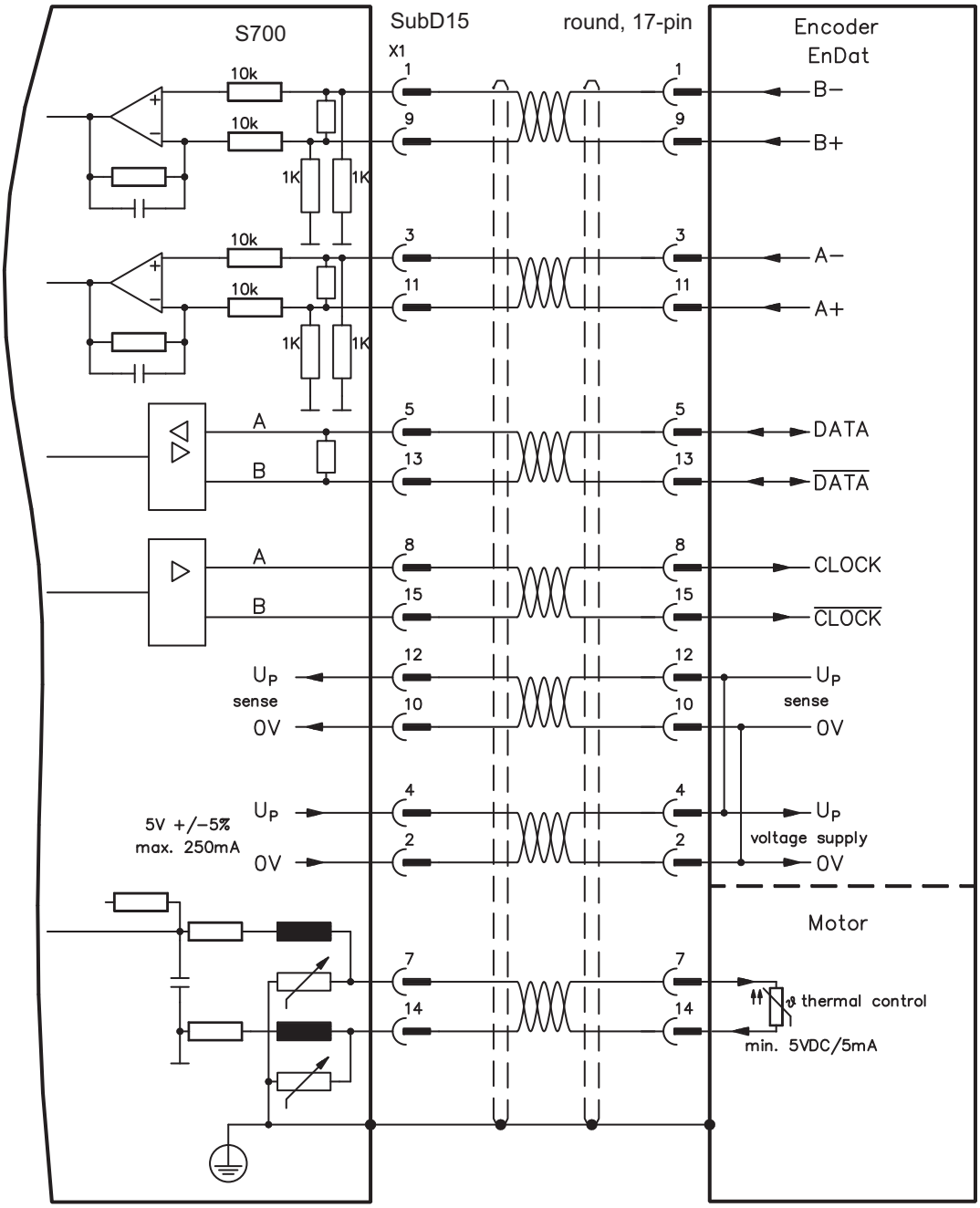

The pin assignment shown on the encoder side relates to the Kollmorgen motors.

7.12.5 Encoder with EnDat 2.2 (X1)

Wiring of a single-turn or multi-turn encoder with EnDat 2.2 interface as a feedback system (primary, ⇨ p.76). The thermal control in the motor is connected via the encoder cable to X1 and evaluated there. All signals are connected using our pre-assembled encoder connection cable.
If cable lengths of more than 50m are planned, please consult our customer service.

Frequency limit: 1,5MHz

Type	FBTYPE	EXTPOS	GEARMODE	Up
5V ENDAT 2.2	32	13	13	5V +/-5%
12V ENDAT 2.2	34	13	13	7,5...11V

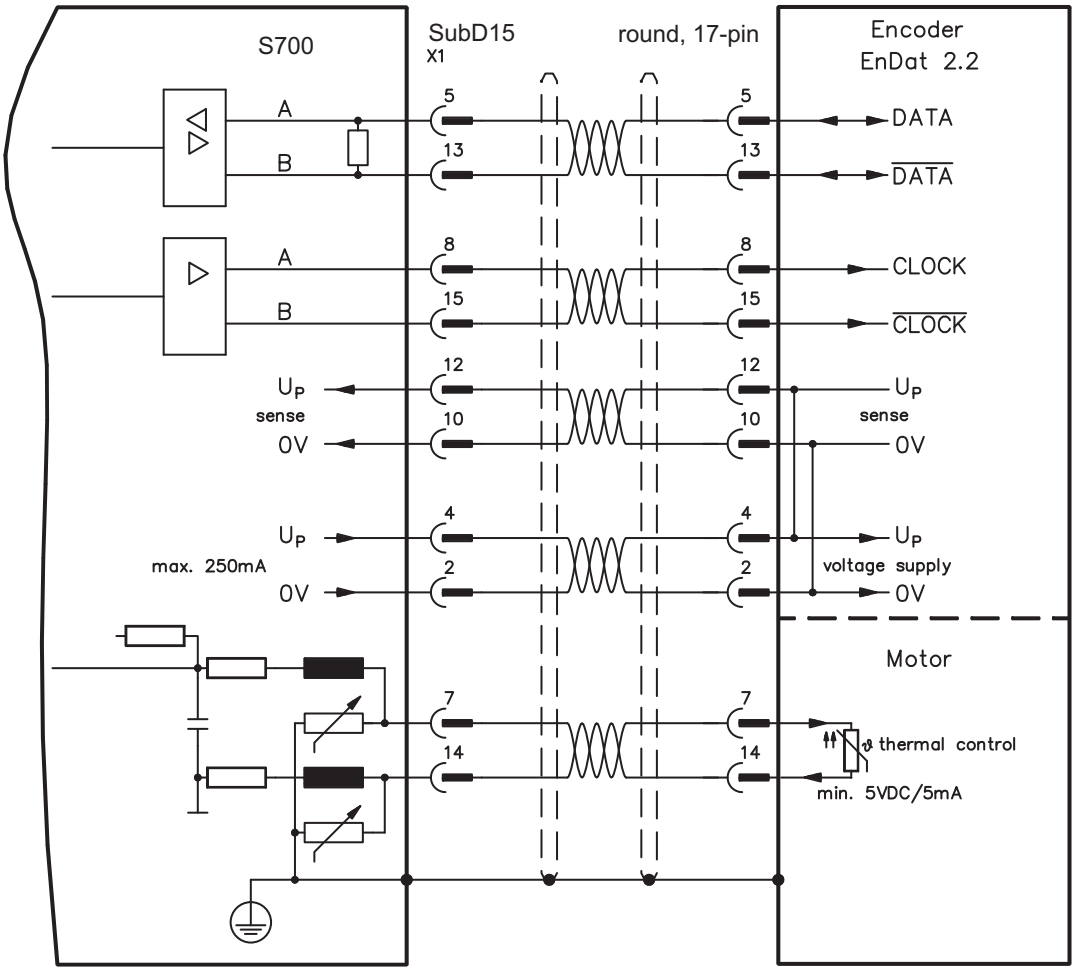

The pin assignment shown on the encoder side relates to the Kollmorgen motors.

7.12.6 Sine Encoder with HIPERFACE (X1)

Wiring of a single-turn or multi-turn sine-cosine encoder with HIPERFACE interface as a feedback system (primary and secondary, ⇨ p.76).

The thermal control in the motor is connected via the encoder cable to X1 and evaluated there. All signals are connected using our pre-assembled encoder connection cable.

If cable lengths of more than 50m are planned, please consult our customer service.

Frequency limit (sin, cos): 350 kHz

Type	FBTYPE	EXTPOS	GEARMODE
HIPERFACE	2	9	9

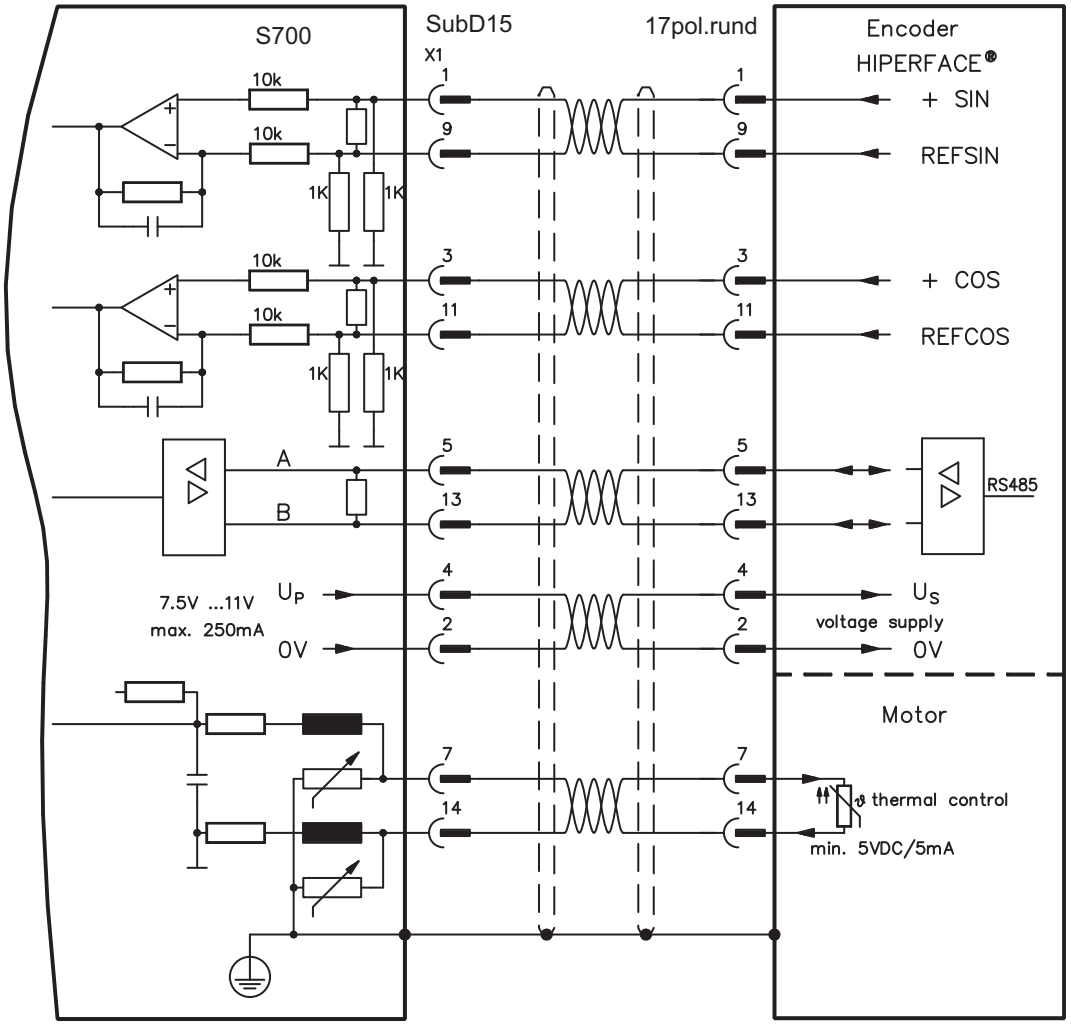

The pin assignment shown on the encoder side relates to the Kollmorgen motors.

7.12.7 Sine Encoder with SSI (X1)

Wiring of sine-cosine encoder with SSI interface as a linear feedback system (primary, ⇨ p.76).

The thermal control in the motor is connected via the encoder cable to X1 and evaluated there. All signals are connected using our pre-assembled encoder connection cable. If cable lengths of more than 50m are planned, please consult our customer service.

Frequency limit (sin, cos): 350 kHz

Type	FBTYPE	EXTPOS	GEARMODE
SinCos SSI 5V linear	26	-	-

Switch on supply voltage for the encoder at X1: set ENCVON to 1

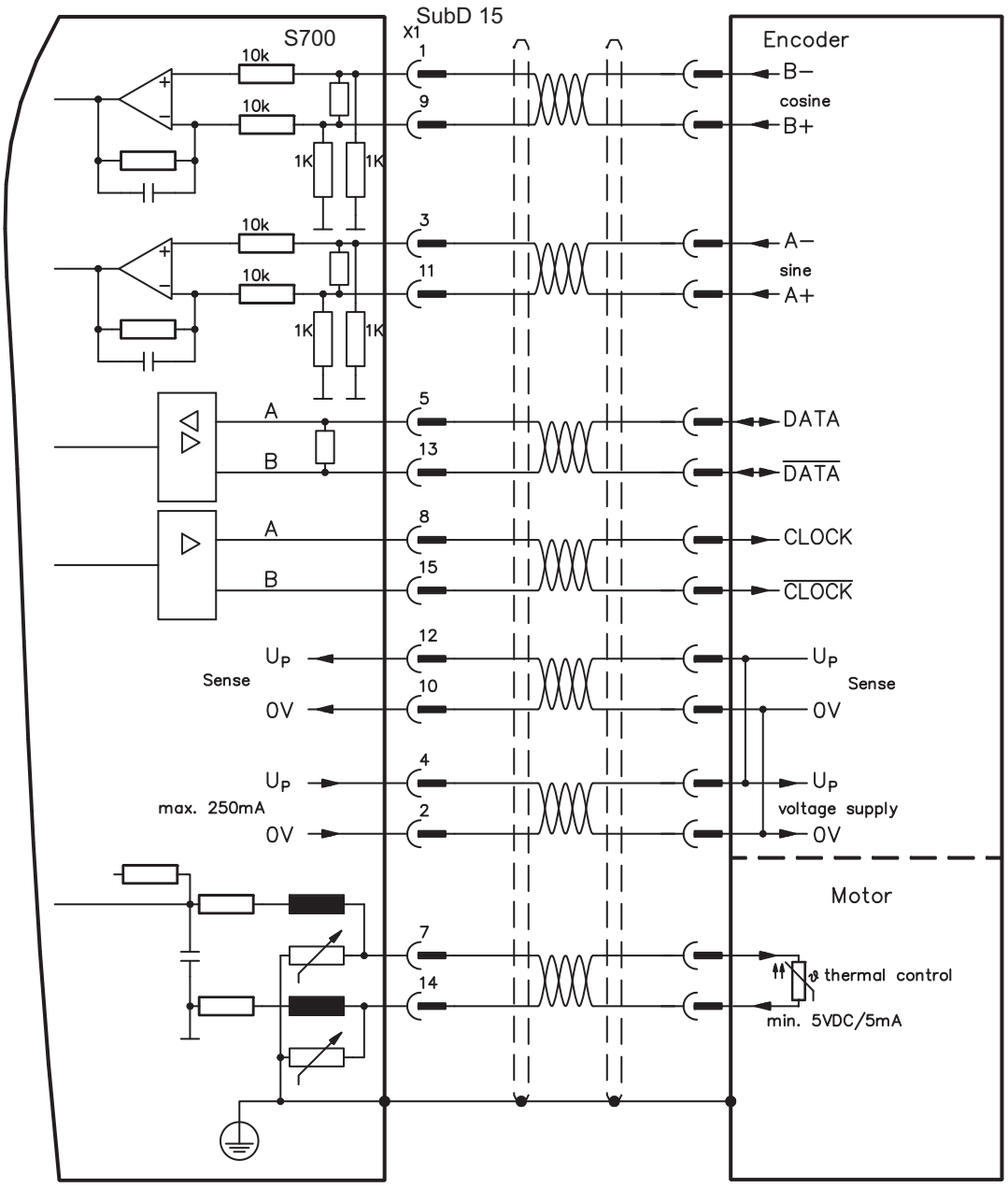

7.12.8 Sine Encoder without data channel (X1)

Wiring of a sine-cosine encoder without data channel as a feedback (primary and secondary, ⇨ p.76). Every time the 24V auxiliary voltage is switched on, the amplifier needs start-up information for the position controller (parameter value MPHASE). Depending on the feedback type either wake&shake is executed or the value for MPHASE is read out of the amplifier's EEPROM.

WARNING

With vertical load the load could fall during wake&shake, because the brake is not active and torque is not sufficient to hold the load.
Don't use wake&shake with vertical load (hanging load).

The thermal control in the motor is connected via the encoder cable to X1 and evaluated there. If lead lengths of more than 50m are planned, please consult our customer service.
Frequency limit (sin, cos): 350 kHz

Type	FBTYPE	EXTPOS	GEARMODE	Up	Remarks
SinCos 5V	1	6	6	5V +/-5%	MPHASE from EEPROM
SinCos 12V	3	7	7	7,5...11V	MPHASE from EEPROM
SinCos 5V	7	6	6	5V +/-5%	MPHASE wake & shake
SinCos 12V	8	7	7	7,5...11V	MPHASE wake & shake

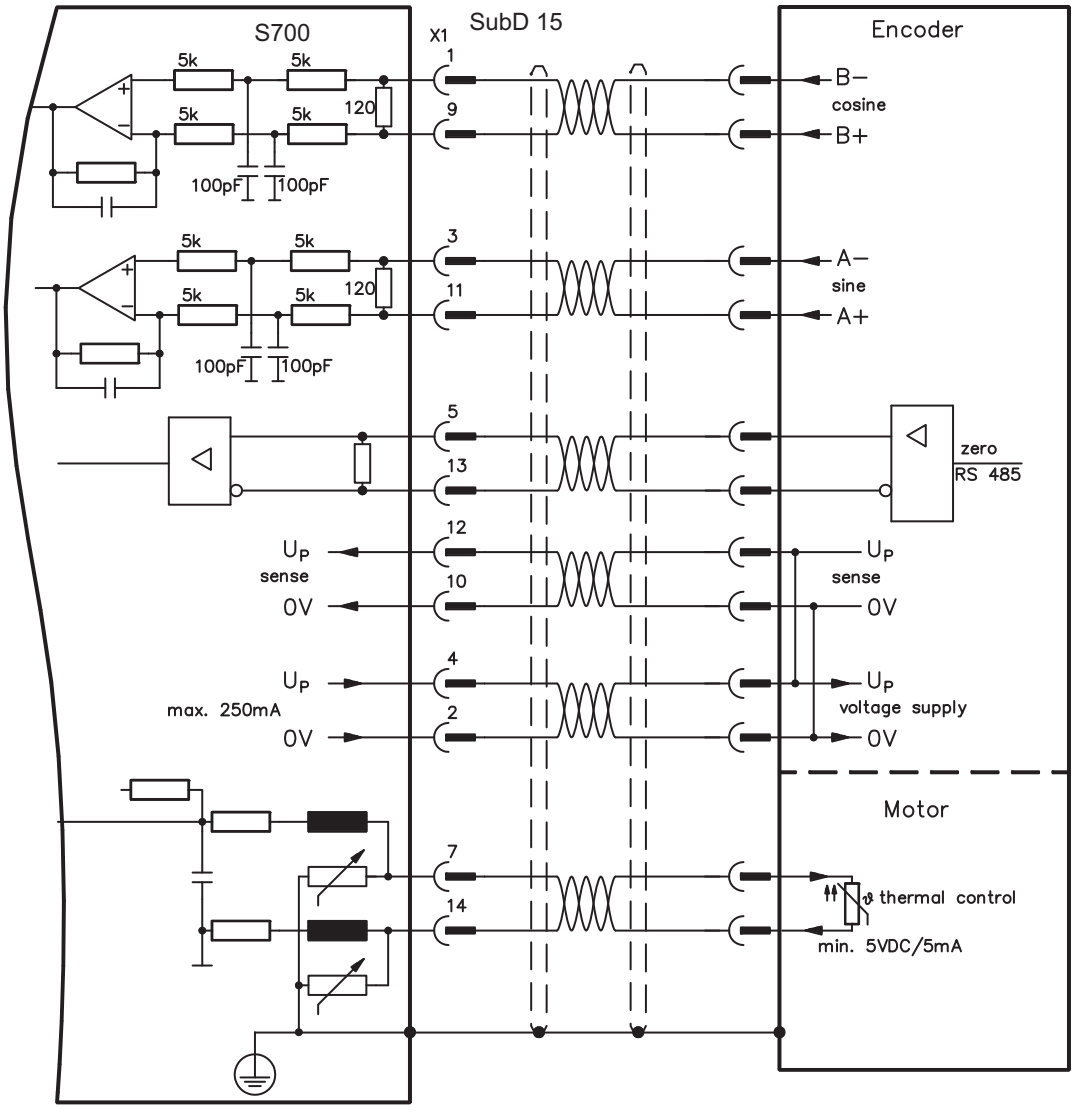

7.12.9 Sine Encoder with Hall (X1)

Feedback devices (incremental or sine-cosine), which don't deliver an absolute information for commutation, can be used as complete feedback system combined with an additional Hall encoder (primary, ⇨ p.76).

The thermal control in the motor is connected to X1 and evaluated there.

All signals are connected to X1 and evaluated there. If cable lengths of more than 25m are planned, please consult our customer service.

Frequency limit (sin, cos): 350 kHz

Type	FBTYPE	EXTPOS	GEARMODE	Up
SinCos 5V with Hall	5	-	-	5V +/-5%
SinCos 12V with Hall	6	-	-	7,5...11V

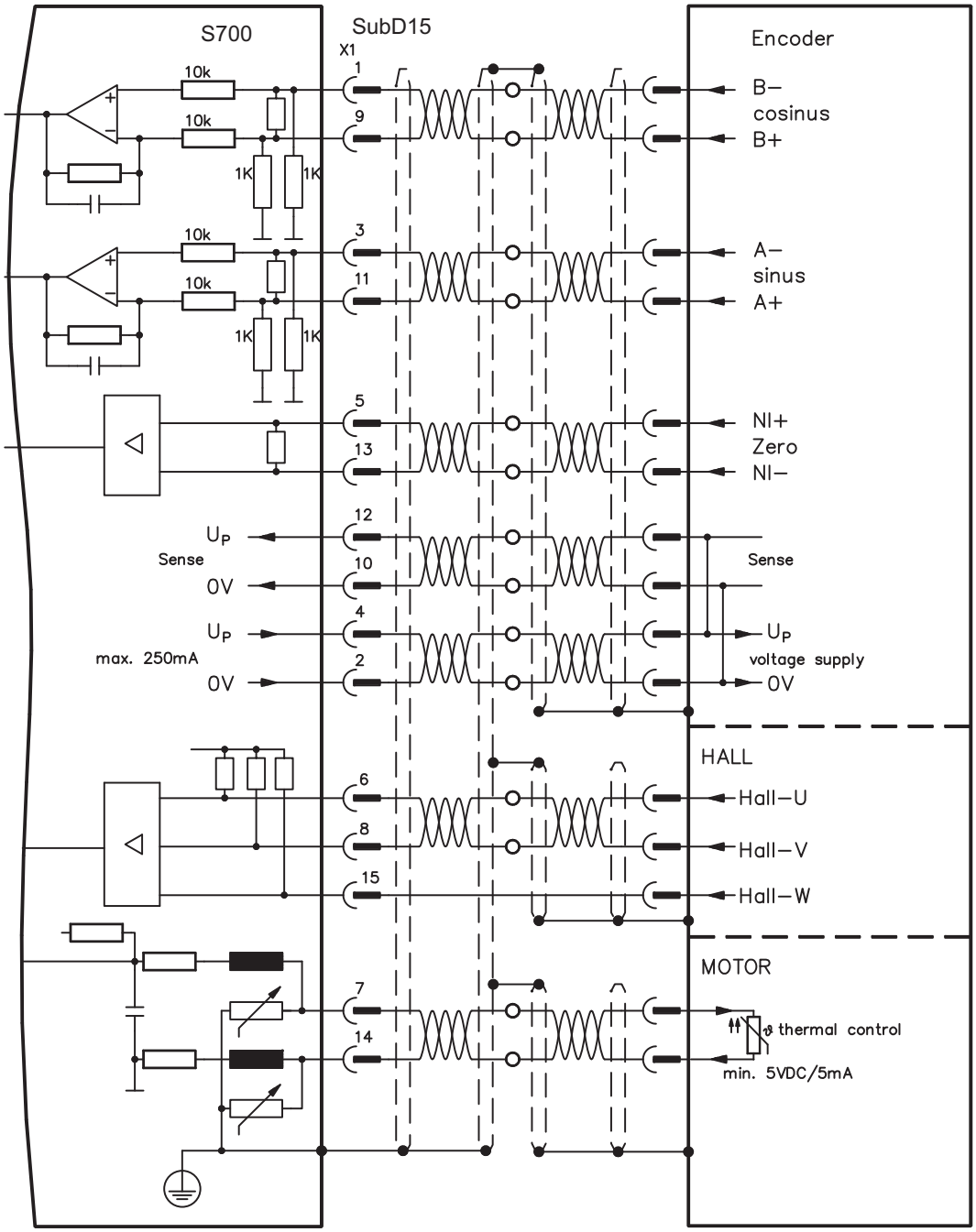

7.12.10 ROD (AquadB) 5V, 1.5MHz (X1)

Wiring of a 5V incremental encoder (ROD, AquadB) as a feedback (primary or secondary, ⇨ p.76). Every time the 24V auxiliary voltage is switched on, the amplifier need start-up information for the position controller (parameter value MPHASE). Depending on the setting of FBTYPE a wake&shake is executed or the value for MPHASE is taken out of the servo amplifier's EEPROM.
The thermal control in the motor is connected via the encoder cable to X1 and evaluated there. All signals are connected using our pre-assembled encoder connection cable. If cable lengths of more than 50m are planned, please consult our customer service.

WARNING

With vertical load the load could fall during wake&shake, because the brake is not active and torque is not sufficient to hold the load.
Don't use wake&shake with vertical load (hanging load).

Frequency limit (A, B): 1,5MHz

Type	FBTYPE	EXTPOS	GEARMODE	Remarks
AquadB 5V	31	30	30	MPHASE from EEPROM
AquadB 5V	30	30	30	MPHASE wake & shake

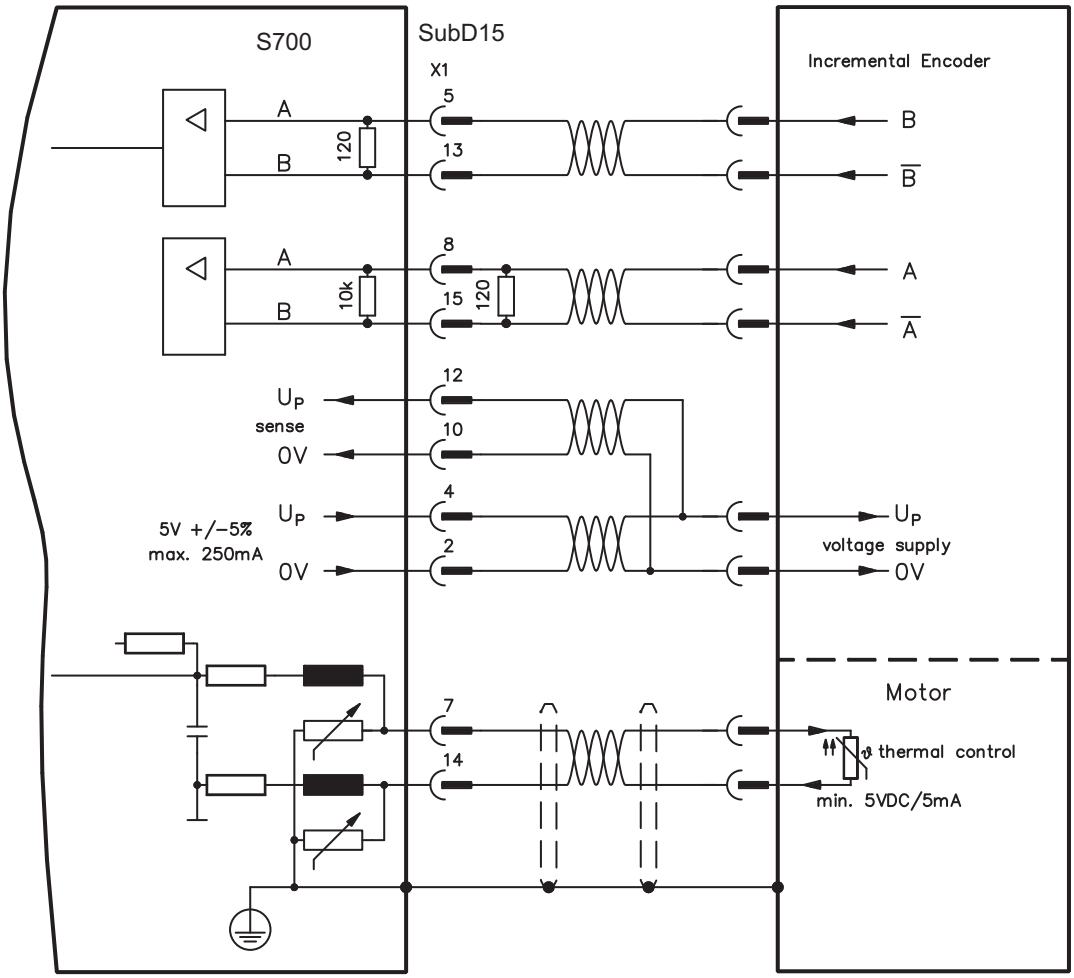

7.12.11 ROD (AquadB) 5V, 350kHz (X1)

Wiring of a 5V incremental encoder (ROD, AquadB) as a feedback (primary or secondary, ⇨ p.76). Every time the 24V auxiliary voltage is switched on, the amplifier need start-up information for the position controller (parameter value MPHASE). With this feedback type the amplifier executes a wake&shake.

WARNING

With vertical load the load could fall during wake&shake, because the brake is not active and torque is not sufficient to hold the load.
Don't use wake&shake with vertical load (hanging load).

The thermal control in the motor is connected to X1 and evaluated there. If lead lengths of more than 50m are planned, please consult our customer service.
Frequency limit (A, B): 350 kHz

Type	FBTYPE	EXTPOS	GEARMODE	Remarks
AquadB 5V	27	10	10	MPHASE from EEPROM
AquadB 5V	17	10	10	MPHASE wake & shake

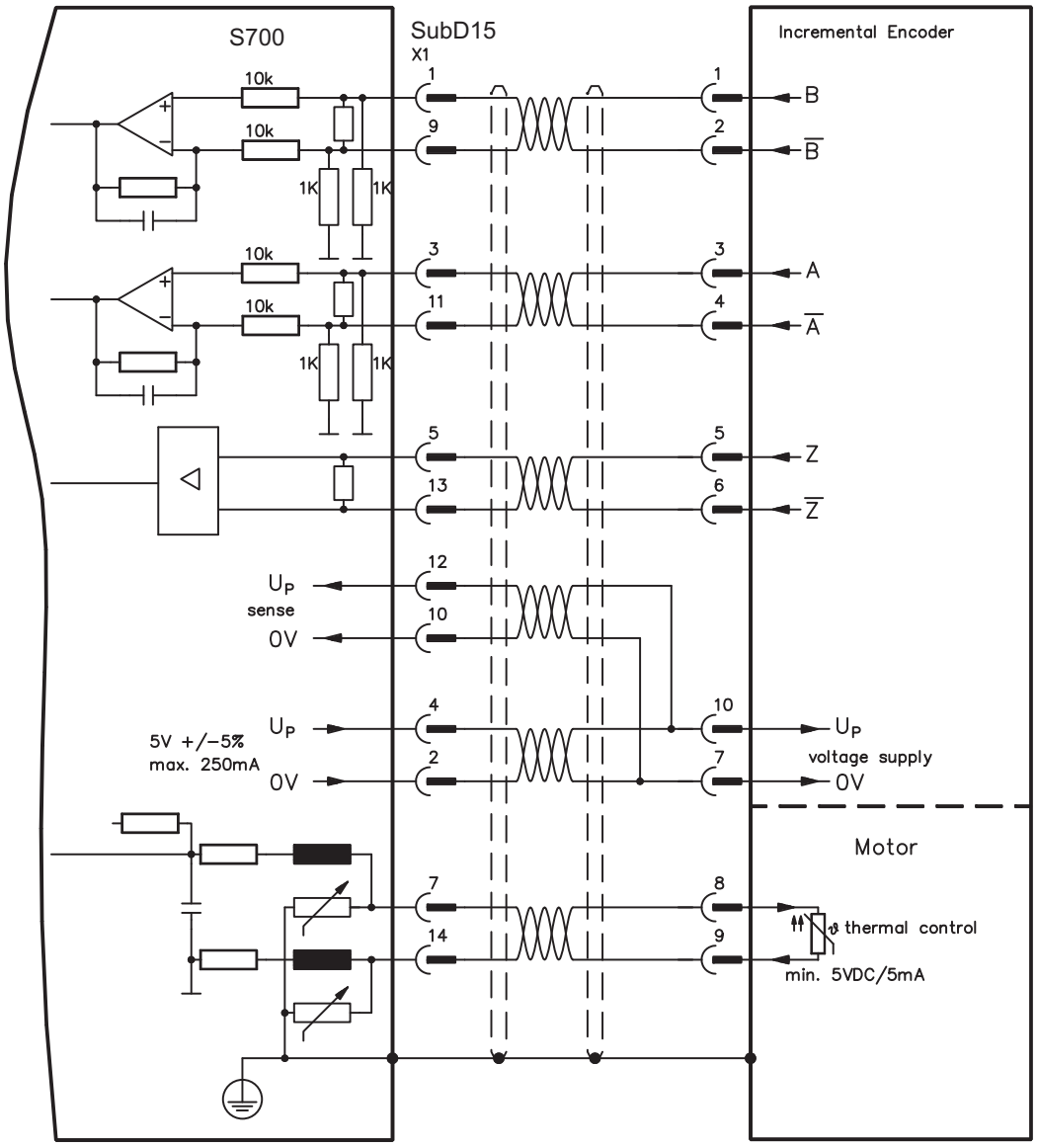

The pin assignment shown on the encoder side relates to the Kollmorgen motors.

7.12.12 ROD (AquadB) 5V, 350kHz with Hall (X1)

Wiring of a ComCoder as a feedback unit (primary, ⇨ p.76). For the commutation hall sensors are used and for the resolution an incremental encoder.
The thermal control in the motor is connected to X1 and evaluated there. With our ComCoder cable all signals are connected correctly. If cable lengths of more than 25m are planned, please consult our customer service. With separate feedback devices (Encoder and Hall are two devices) the wiring must be done similar to chapter 7.12.9, but the amplifier's pinout is identical to the wiring diagram shown below.
Frequency limit (A,B): 350 kHz

Type	FBTYPE	EXTPOS	GEARMODE
AquadB 5V + Hall	15	-	-

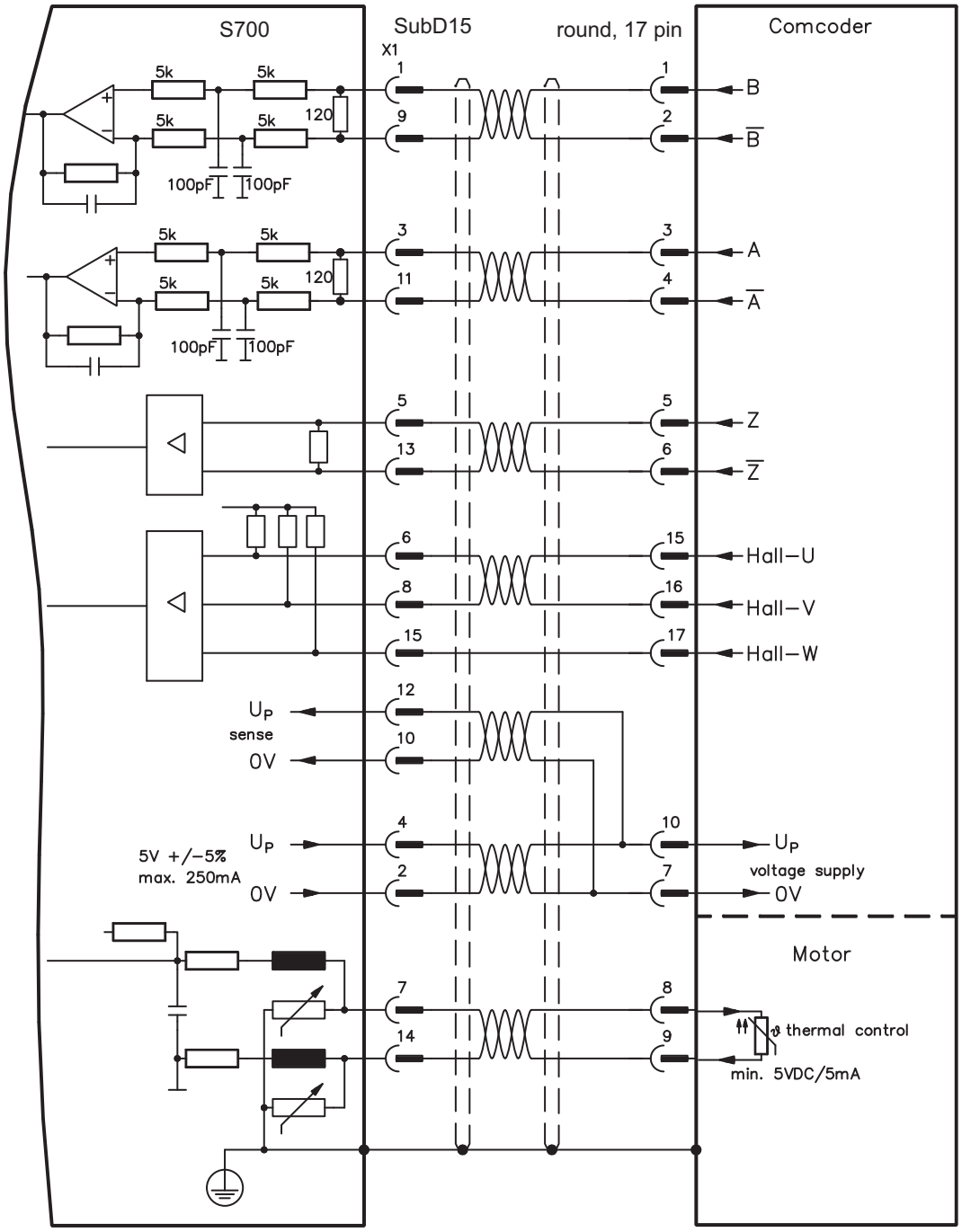

The pin assignment shown on the encoder side relates to the Kollmorgen motors.

7.12.13 ROD (AquadB) 24V (X3)

Wiring of a 24V incremental encoder (ROD AquadB) as a feedback system (primary or secondary, ⇨ p.76). This uses the digital inputs DIGITAL-IN 1 and 2 on connector X3. Every time the 24V auxiliary voltage is switched on, the amplifier need start-up information for the position controller (parameter value MPHASE). With this feedback type the amplifier executes a wake&shake is executed every time the 24V auxiliary voltage is switched on.

WARNING

With vertical load the load could fall during wake&shake, because the brake is not active and torque is not sufficient to hold the load.
Don't use wake&shake with vertical load (hanging load).

The thermal control in the motor is connected to X1 or X2. If cable lengths of more than 25m are planned, please consult our customer service.

Frequency limit: 100 kHz, transition time tv ≤ 0.1µs

Type	FBTYPE	EXTPOS	GEARMODE	Remarks
AquadB 24V	12	2	2	MPHASE from EEPROM
AquadB 24V	16	2	2	MPHASE wake & shake

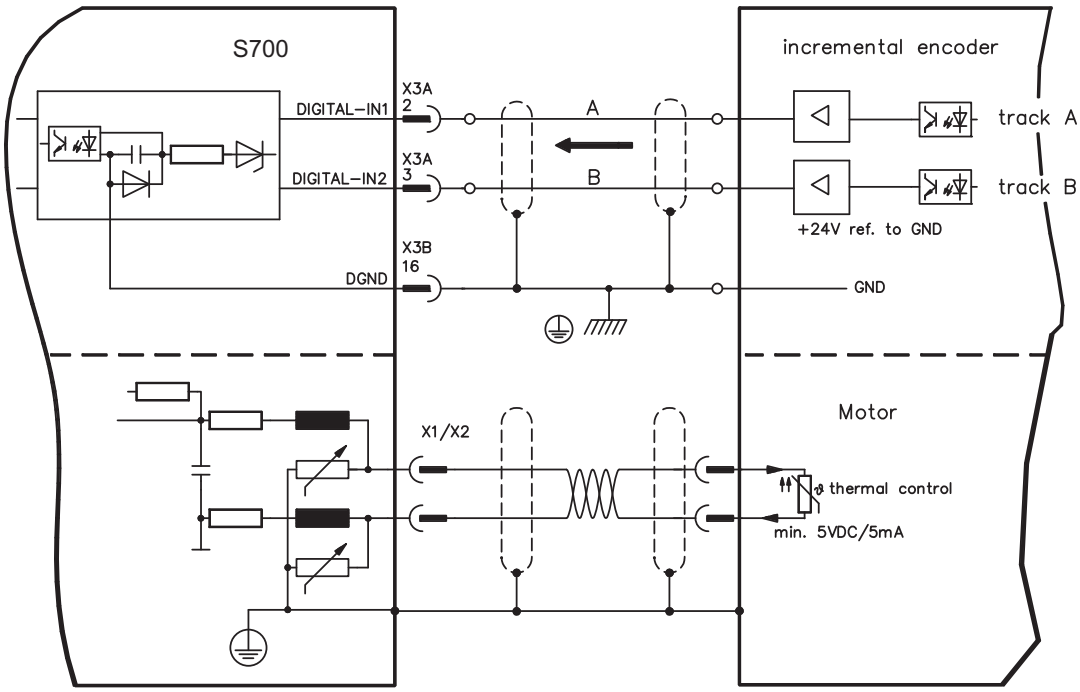

7.12.14 ROD (AquadB) 24V with Hall (X3, X1)

Wiring of a 24V incremental encoder (ROD, AquadB) and Hall sensors as a feedback unit (primary, ⇨ p.76). For the commutation hall sensors are used and for the resolution an incremental encoder.

The thermal control in the motor is connected to X1 and evaluated there. If cable lengths of more than 25m are planned, please consult our customer service.

Frequency limit X3: 100 kHz, X1: 350 kHz

Type	FBTYPE	EXTPOS	GEARMODE
AquadB 24V + Hall	14	-	-

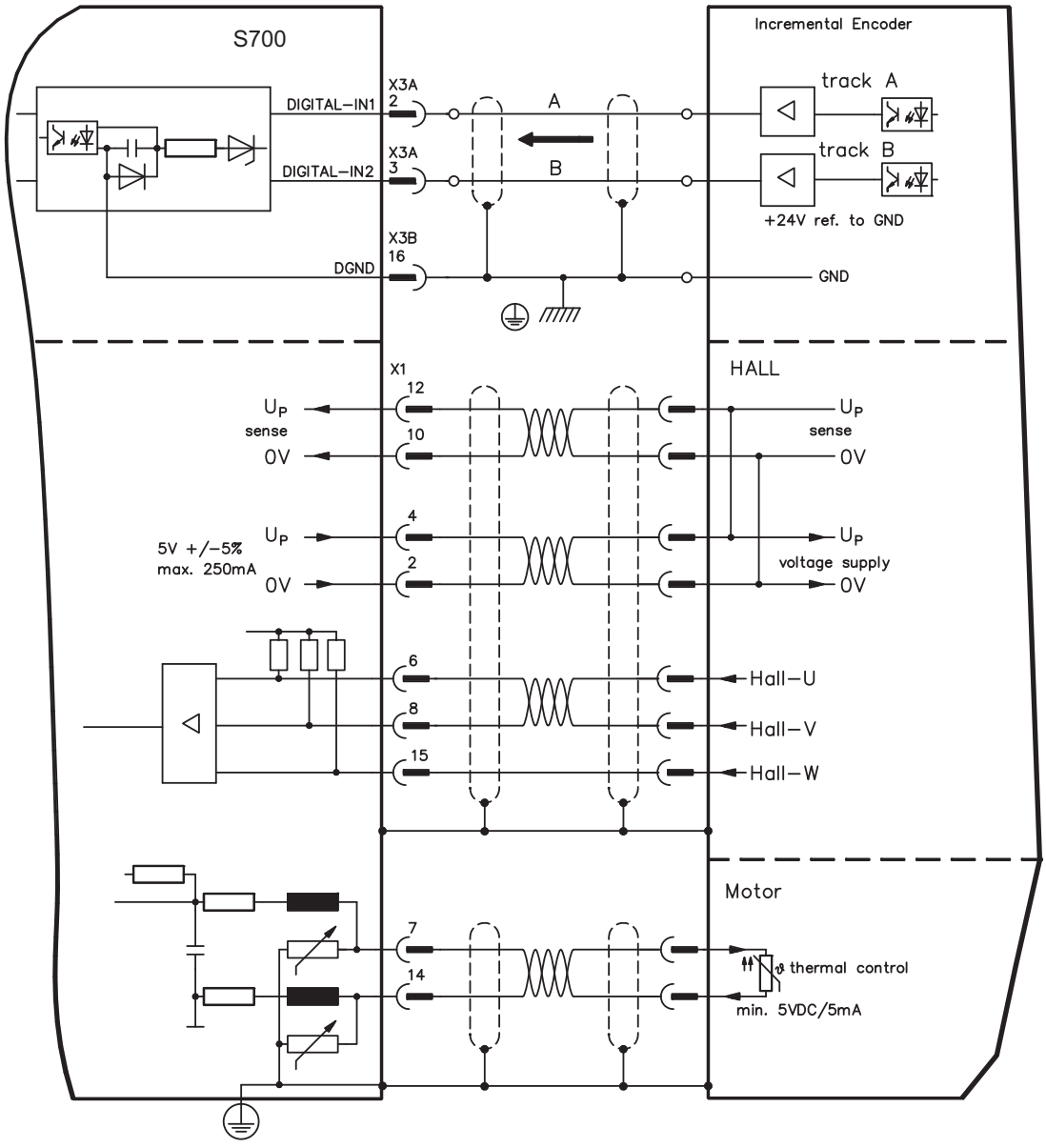

7.12.15 SSI Encoder (X1)

Wiring of a synchronous serial absolute-encoder as a feedback system (primary or secondary, ⇨ p.76). The signal sequence can be read in **Gray** code or in **Binary** (standard) code. The thermal control in the motor is connected to X1 and evaluated there. If cable lengths of more than 50m are planned, please consult our customer service.

Frequency limit: 1.5MHz
Resolution/turn: max. 16 Bit
Turns: max. 16 Bit

Type	FBTYPE	EXTPOS	GEARMODE
SSI	25	25	25

Switch on supply voltage for the encoder at X1: set ENCVON to 1

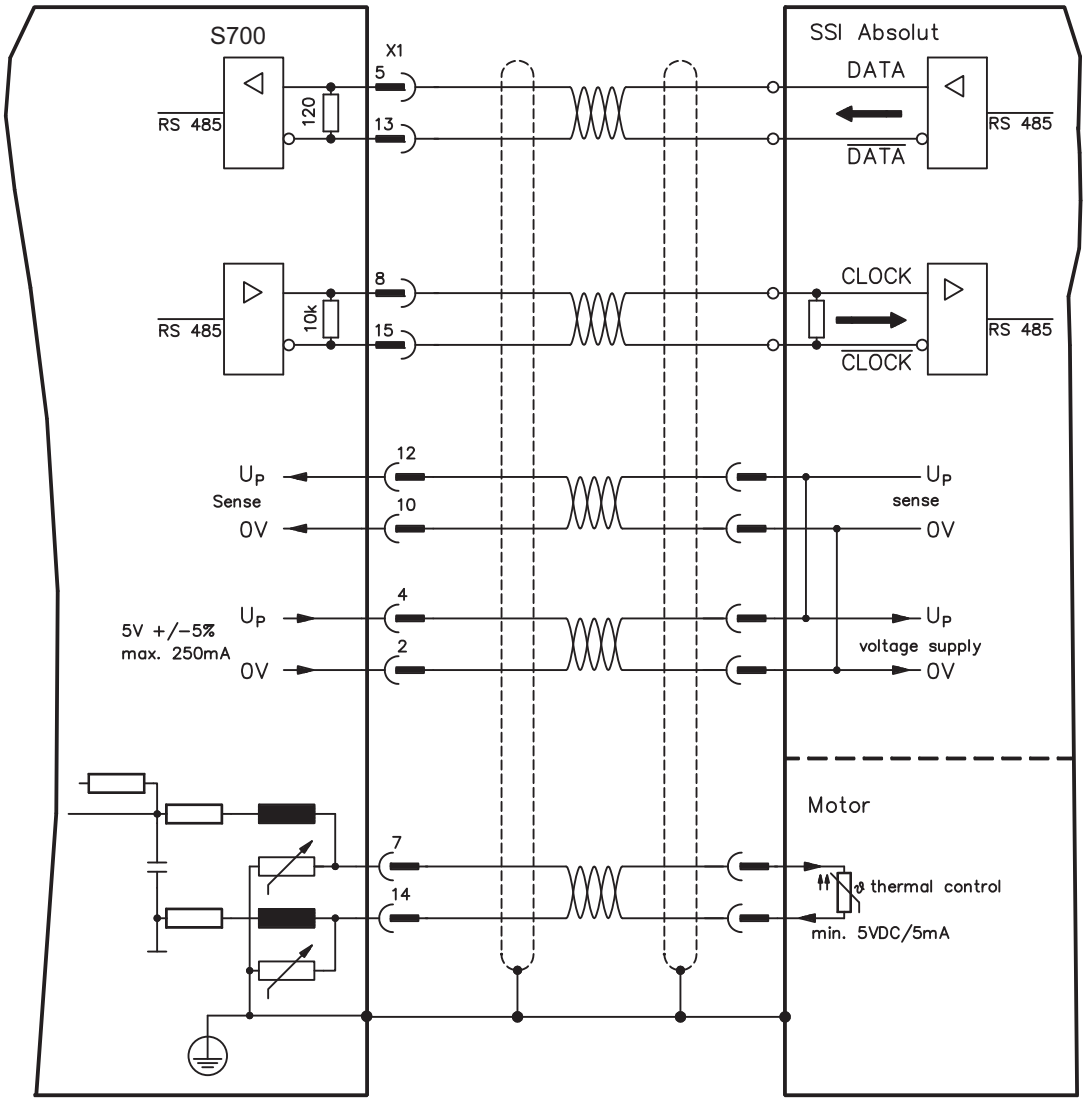

7.12.16 Hall sensors (X1)

Wiring of Hall sensors as a feedback unit (primary, ⇨ p.76).

The thermal control in the motor is connected to X1 and evaluated there. If cable lengths of more than 25m are planned, please consult our customer service.

Frequency limit: 350 kHz

Type	FBTYPE	EXTPOS	GEARMODE
Hall	11	-	-

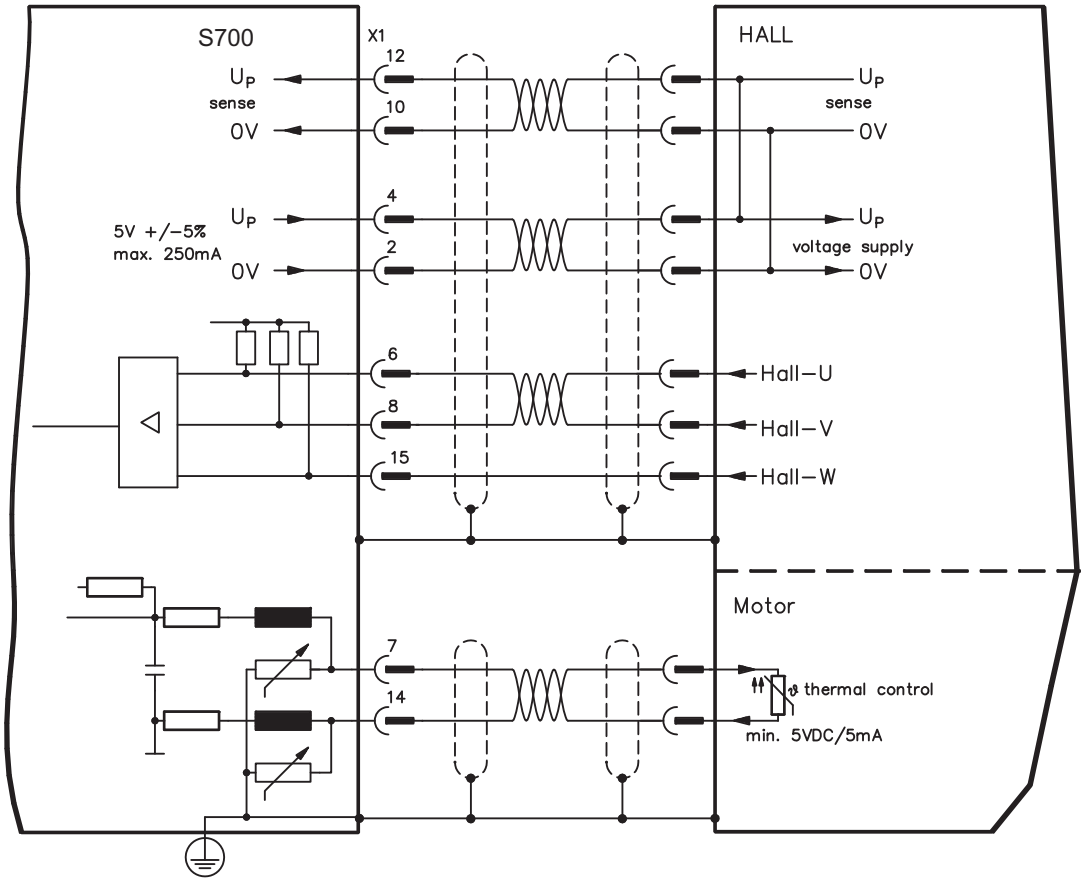

7.13 Electronic Gearing, Master-Slave operation

In the case of the “electronic gearing” functionality (see setup software and description of GEARMODE parameter), the servo amplifier is controlled by a secondary feedback device as a slave.

It is possible to set up master/slave systems, use an external encoder as a setpoint encoder or connect the amplifier to a stepper motor control.

The amplifier is parameterized using the setup software (electronic gearing, parameter GEARMODE).

The resolution (number of pulses per revolution) can be adjusted.

NOTE

If input X1 is used without the X1 power supply (pins 2, 4, 10, 12), e.g. master-slave operation with other servoamplifiers, the monitoring of this power supply must be switched off in order to prevent error message F04 from appearing. To do this, you must change Bit 20 of the DRVCNFG2 parameter (see ASCII object reference in the online help).

7.13.1 Encoder control types

The following types of external encoder can be used for control:

S700 controlled by	Frequency limit	Connector	Wiring diagram	GEARMODE
Encoder BiSS digital	1,5MHz	X1	⇨ p.79	11, 12
SinCos Encoder ENDAT 2.1	350kHz	X1	⇨ p.80	8
Encoder ENDAT 2.2	1,5MHz	X1	⇨ p.81	13
SinCos Encoder HIPERFACE	350kHz	X1	⇨ p.82	9
SinCos Encoder without data channel	350kHz	X1	⇨ p.84	6, 7
ROD* (AquadB) 5V	1.5MHz	X1	⇨ p.86	30
ROD* (AquadB) 5V	350kHz	X1	⇨ p.87	10
ROD* (AquadB) 24V	100kHz	X3	⇨ p.89	2
SSI 5V	1,5 MHz	X1	⇨ p.91	25
Step/direction 5V	1.5MHz	X1	⇨ p.94	27
Step/direction 24V	100kHz	X3	⇨ p.94	1

With a "PosI/O" or "PosI/O-Monitor" expansion card in slot 2 or 3 (see p.142 ff), the following encoder types can be used:

S700 controlled by	Frequency limit	Connector	Wiring diagram	GEARMODE
SSI 5V	1.5MHz	X5	⇨ p.145	5
ROD* (AquadB) 5V	1.5MHz	X5	⇨ p.147	3
Step/direction 5V	1.5MHz	X5	⇨ p.147	4

* ROD is an abbreviation for incremental encoder

7.13.2 Connection to stepper motor controllers (step and direction)

You can connect the servo amplifier to a third-party stepper-motor controller. Parameter setting for the slave amplifier is carried out with the aid of the setup software (electronic gearing). The number of steps can be adjusted, so that the servo amplifier can be adapted to match the step-direction signals of any stepper controller. Various monitoring signals can be generated.

NOTE Using an A quad B encoder provides better EMC noise immunity.

7.13.2.1 Step / Direction with 5 V signal level (X1)

Wiring of the servo amplifier (SubD connector X1) to a stepper-motor controller with a 5V signal level. Frequency limit: 1.5 MHz

Control	GEARMODE
Step/direction 5V	27

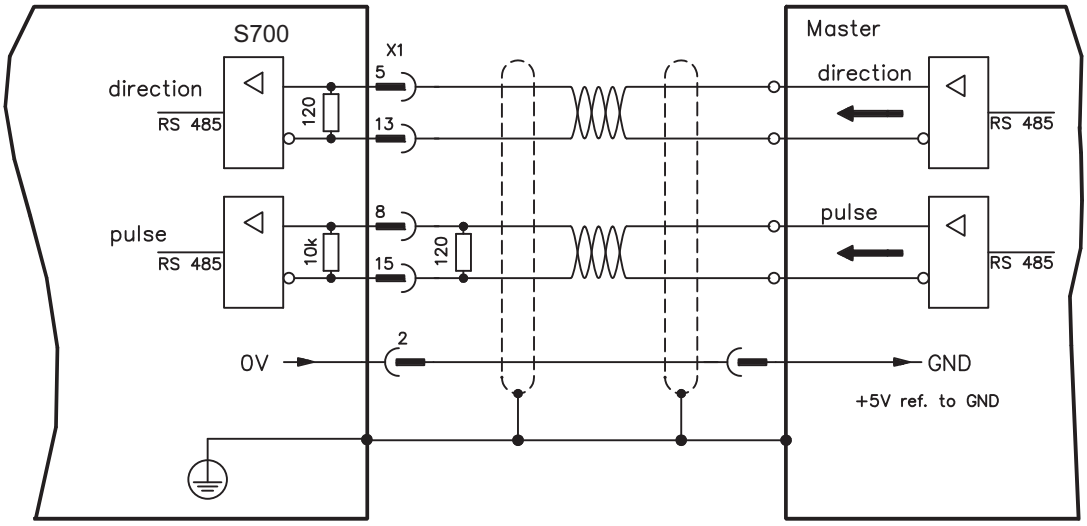

7.13.2.2 Step / Direction with 24 V signal level (X3)

Wiring of the servo amplifier to a stepper-motor controller with a 24 V signal level. Used are the digital inputs DIGITAL-IN 1 and 2 on connector X3.
Frequency limit: 100 kHz,

Control	GEARMODE
Step/direction 24V	1

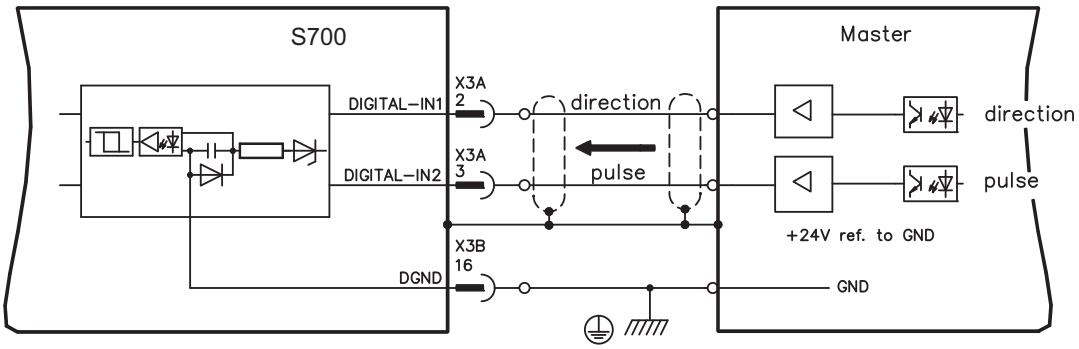

7.13.3 Master-slave operation

7.13.3.1 Connection to an S700 master, 5V signal level (X1)

You can link two S700 amplifiers together in master-slave operation. One slave amplifier can be controlled by the master, via the encoder output X1 (see p. 96).

Master: position output to X1 (screen page "Encoder emulation")
Slave: screen page "Electronic gearing" (GEARMODE)

Frequency limit: 1.5 MHz

Example for Master-Slave operation with two S700 amplifiers:
Slave **GEARMODE: 30** Master **ENCMODE:9**

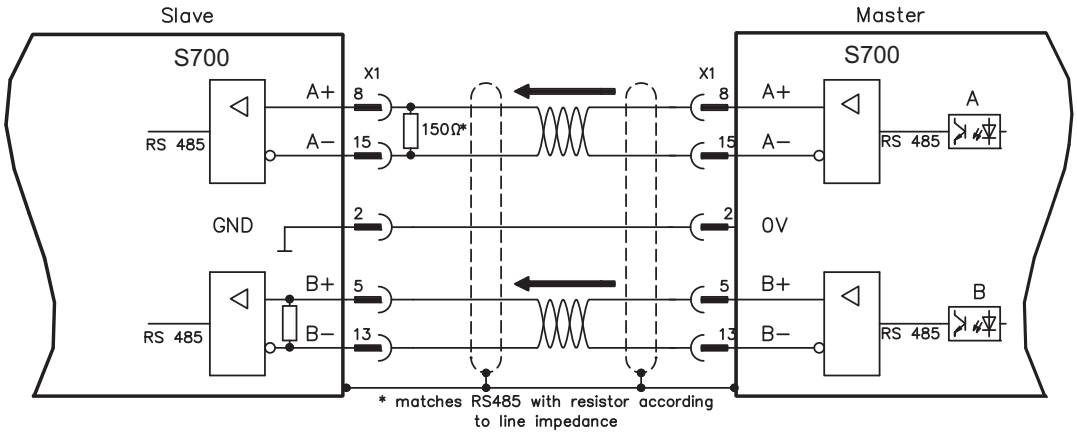

If using SSI emulation, then the master must be set to ENCMODE 10 and the slave to GEARMODE 25.

7.13.3.2 Connection to an S700 Master, 5V signal level (X5)

If an expansion card PosI/O or PosI/O-Monitor (see p.142 ff) is built-in, you can use the encoder emulation via X5. With this interface **up to 16 Slaves** can be connected to one Master, because no internal termination resistors are built-in with X5. Wiring see p.147.

7.14 Encoder Emulation, position output

7.14.1 Incremental encoder output - A quad B (X1)

Fast incremental encoder interface. Select encoder function ROD (A Quad B) Encoder ("Encoder Emulation" screen page). The servo amplifier calculates the motor shaft position from the cyclic- absolute signals of the resolver or encoder, generating incremental-encoder compatible pulses from this information. Pulse outputs on the SubD connector X1 are 2 signals, A and B, with 90° phase difference (i.e. in quadrature, hence the alternative term "A quad B" output), with a zero pulse.
The resolution (before multiplication) can be set:

Encoder function (ENCMODE)	Feedback system (FBTYPE)	Resolution lines (ENCOUT)	Zero pulse (NI)
9, ROD => X1	0, Resolver	32...4096	once per turn
	>0, Encoder	256...524288 (2^8 … 2^{19})	(only at A=B=1)

NOTE With built in safety card only binary resolutions up to 2^{12} are possible.

Use the NI-OFFSET parameter to adjust + save the zero pulse position within one mechanical turn. The drivers operate off an internal supply voltage.

NOTE The maximum permissible cable length is 100 meters.

Connections and signals for the incremental encoder interface :
Default count direction: UP when the motor shaft is rotating clockwise (looking at the shaft's end)

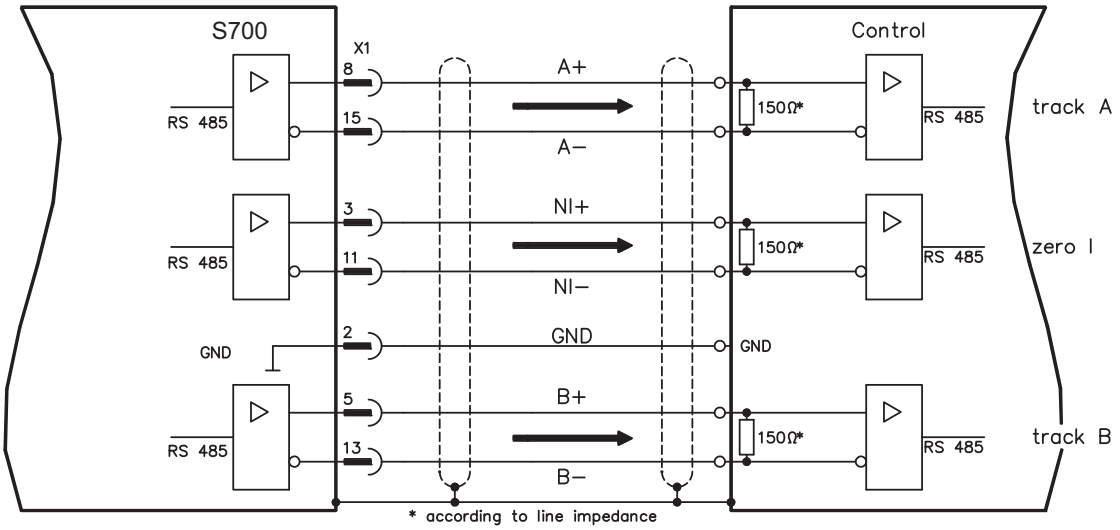

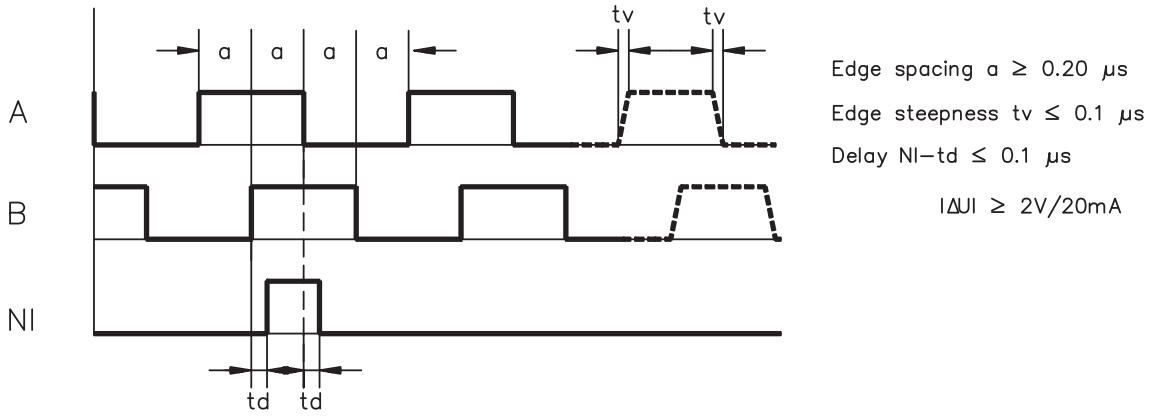

7.14.2 SSI encoder output (X1)

SSI interface (synchronous serial absolute-encoder emulation). Select encoder function SSI (“Encoder Emulation” screen page, ENCMODE 10). The servo amplifier calculates the motor shaft position from the cyclic-absolute signals of the resolver or encoder. From this information a SSI date (Stegmann patent specification DE 3445617C2) is provided. Max 32 bits are transferred. The leading data bit contains the number of revolutions and are selectable from 12 to 16 bits. The following max. 16 bits contain the resolution and are not variable.

The following table shows the allocation of the SSI date depending upon selected number of revolutions:

	Revolution																Resolution (variable)															
	SSIREVOL																															
Bit	15	14	13	12	11	10	9	8	7	6	5	4	3	2	1	0	15	14	13	12	11	10	9	8	7	6	5	4	3	2	1	0
		14	13	12	11	10	9	8	7	6	5	4	3	2	1	0																
			13	12	11	10	9	8	7	6	5	4	3	2	1	0																
				12	11	10	9	8	7	6	5	4	3	2	1	0																
					11	10	9	8	7	6	5	4	3	2	1	0																

The signal sequence can be output in **Gray** code or in **Binary** (standard) code.
The servo amplifier can be adjusted to the clock frequency of your SSI-evaluation with the setup software.

The drivers operate off an internal supply voltage.

Connection and signals for the SSI interface :
Default count direction: UP when the motor shaft is rotating clockwise (looking at the end of the motor shaft)

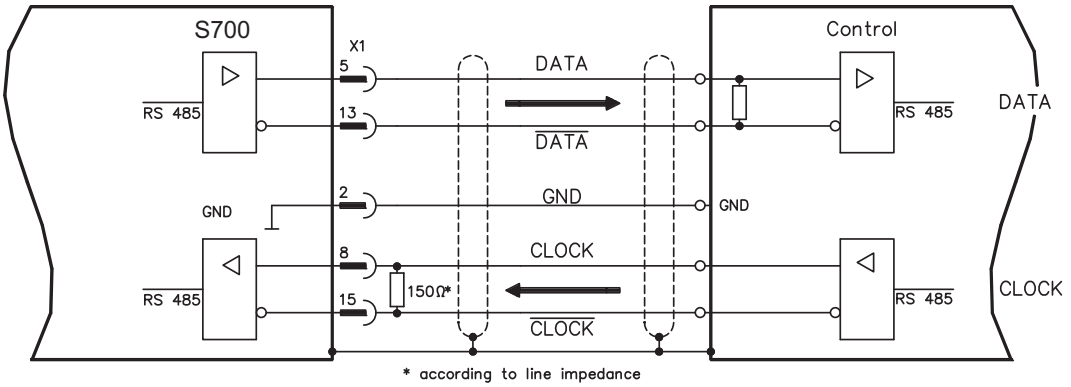

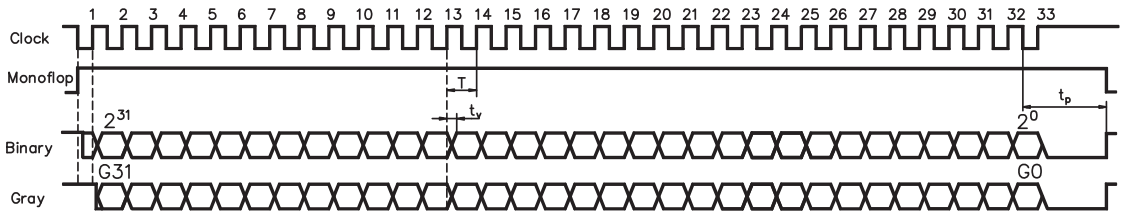

Switch over time Data t_v ≤ 300nsec
Period T = 600 ns
Time Out t_p = 3µs/13µs (SSITOUT)

Output IΔUI ≥ 2V/20mA
Input IΔUI ≥ 0.3V

7.15 Digital and analog inputs and outputs

7.15.1 Analog Inputs (X3B)

The servo amplifier is fitted with two **programmable** differential inputs for analog set-points. AGND (X3B/13) must always be joined to controls-GND as a ground reference.

Technical characteristics

- Differential-input voltage max. ± 10 V
- Ground reference AGND, terminal X3B/13
- Input resistance 150 kΩ
- Common-mode voltage range for both inputs ± 10 V
- Update rate 62.5 µs

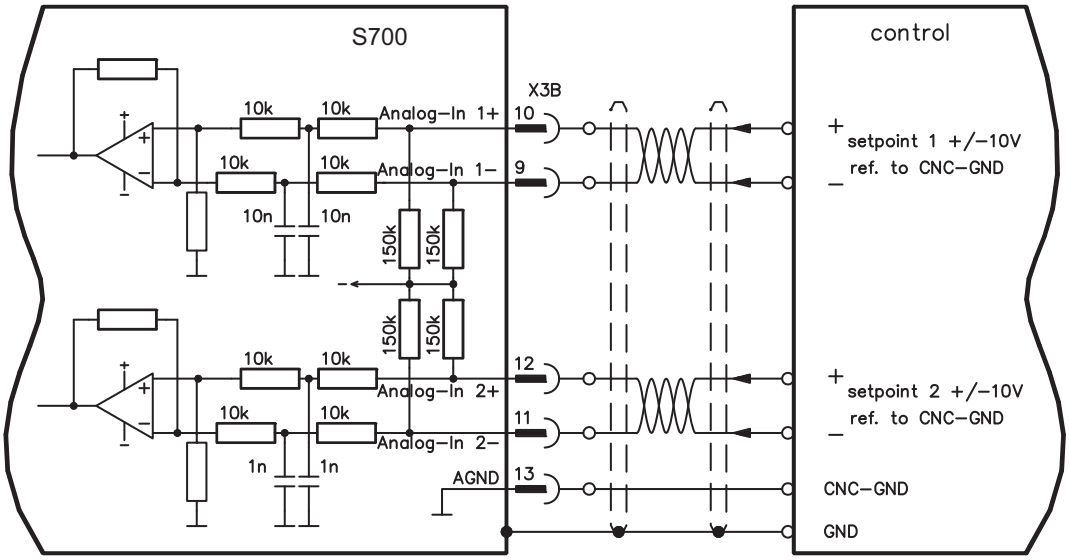

Analog-In 1 input (terminals X3B/10-X3B/9)
Differential input voltage max. ± 10 V, resolution 16 Bit (accuracy 13 Bit), scalable.
Standard setting: speed setpoint

Analog-In 2 input (terminals X3B/12-X3B/11)
Differential input voltage max. ± 10 V, resolution 16 Bit (accuracy 13 Bit), scalable.
Standard setting: torque setpoint

Application examples for setpoint input Analog-In 2:
- adjustable external current limit
- reduced-sensitivity input for setup or jog operation
- pre-control, override

If an input was freshly assigned to a pre-programmed function, then the data set must be saved in the EEPROM of the servo amplifier and a reset has to be carried out (with the amplifier setup software for example).

Defining the direction of rotation
Standard setting : clockwise rotation of the motor shaft (looking at the shaft end)
- Positive voltage between terminal X3B/10 (+) and terminal X3B/9 (-) or
- Positive voltage between terminal X3B/12 (+) and terminal X3B/11 (-)

To reverse the direction of rotation, swap the connections to terminals X3B/10-X3B/9 or X3B/12-X3B/11 respectively, or change the COUNT DIRECTION parameter in the “Feed-back” screen page.

7.15.2 Digital Inputs (X3A, X3B and X4A, X4B)

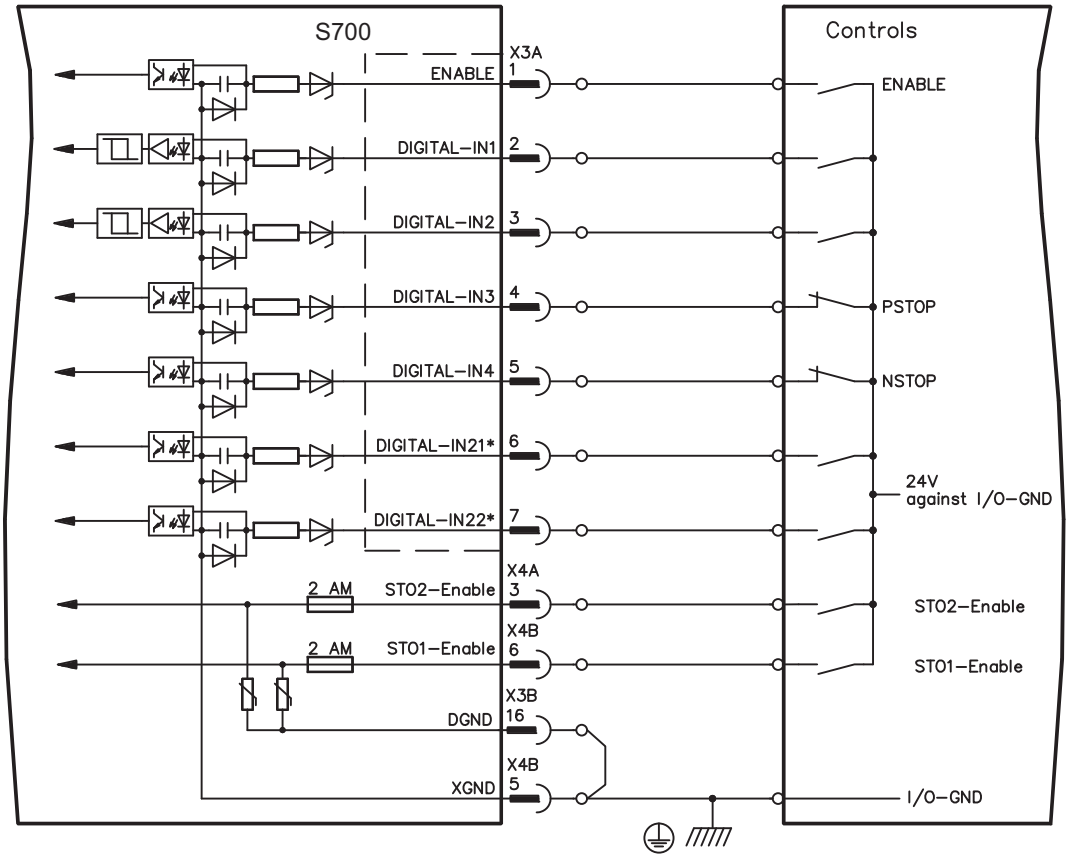

* DIGITAL-IN 21 and 22 must be defined as inputs using the setup software (“Digital I/O” screen page).

7.15.2.1 Connector X4A, X4B

You can thus achieve a restart lock-out for functional safety by using the STO1-Enable and STO2-Enable inputs in conjunction with an external safety circuit.

Input STO1-ENABLE (X4B/6) and STO2-Enable (X4A/3)

— Floating, reference ground is XGND
— 20V...30V / 33mA...40mA

NOTE These inputs are not compatible with IEC 61131-2.

These additional digital inputs releases the power output stage of the amplifier as long as a 24 V signal is applied to these inputs. If the STO inputs go open-circuit, then power will no longer be supplied to the motor, **the drive will lose all torque and coast down to a stop.**

NOTICE Failsafe braking of the drive, if required, must be provided by means of an additional mechanical brake, since electrical braking by the drive is no longer possible.

You can find further information and connection examples on page 41ff.

7.15.2.2 Connector X3A, X3B

Input ENABLE

— PLC compatible (IEC 61131-2 type 1), floating, reference ground is DGND
— High: 15...30 V / 2...15 mA , Low: -3...5 V / <1mA
— Update rate: Software 250 µs

The output stage of the servo amplifier is enabled by applying the ENABLE signal (Terminal X3A/1, **active high**). Enable is possible only if inputs STOx-Enable have a 24 V signal (see page 41ff). In the disabled state (low signal) the connected motor has no torque.

A software enable by means of the setup software is also required (AND link), although this can also be permanently enabled (“Basic Setup” screen page of the DRIVEGUI.EXE setup software).

Programmable digital inputs (X3):

You can use the digital inputs X3A/2 to X3A/7 to initiate pre-programmed functions that are stored in the servo amplifier. A list of these pre-programmed functions can be found on the “Digital I/O” screen page of our setup software.
If an input was freshly assigned to a pre-programmed function, then the data set must be saved in the EEPROM of the servo amplifier and a reset has to be carried out (with the amplifier setup software for example).

Digital Inputs DIGITAL-IN 1 and DIGITAL-IN 2 (X3A/2,X3A/3):

These inputs are particularly fast and are therefore suitable for latch functions or for high-speed feedback signals, for example.

— PLC compatible (IEC 61131-2 type 1), floating, reference ground is DGND
— High: 15...30 V / 2...15 mA , Low: -3...5 V / <1mA
— Update rate: Hardware 2µs

Digital Inputs DIGITAL-IN 3 and DIGITAL-IN 4 (X3A/4,X3A/5):

The PSTOP and NSTOP limit switch evaluation functions, for instance, can be assigned to these inputs. Choose the function you require in the setup software (“Digital I/O” screen page).

— PLC compatible (IEC 61131-2 type 1), floating, reference ground is DGND
— High: 15...30 V / 2...15 mA, Low: -3...5 V / <1mA
— Update rate: Software 250 µs

Digital Inputs DIGITAL-IN 21 and DIGITAL-IN 22 (X3A/6,X3A/7):

Pins 6 and 7 on X3A can be used as either inputs or outputs. Choose the function you require in the setup software (“Digital I/O” screen page).

— PLC compatible (IEC 61131-2 type 1), floating, reference ground is DGND
— High: 15...30 V / 2...15 mA, Low: -3...5 V / <1mA
— Update rate: Software 250 µs

NOTE Depending on the selected function the inputs are high or low active.

7.15.3 Digital Outputs (X3A, X3B)

Technical characteristics

— Power supply at terminals X3A/8 (24V-IO) and X3B/16 (DGND)
— All digital outputs are floating
— 24V-IO : 20V DC … 30V DC
DIGITAL-OUT1 / 2 : PLC compatible (IEC 61131-2 type 1), max. 100mA
BTB/RTO : Relay output, max. 30V DC or 42V AC, 0.5A
— Update rate : 250 µs

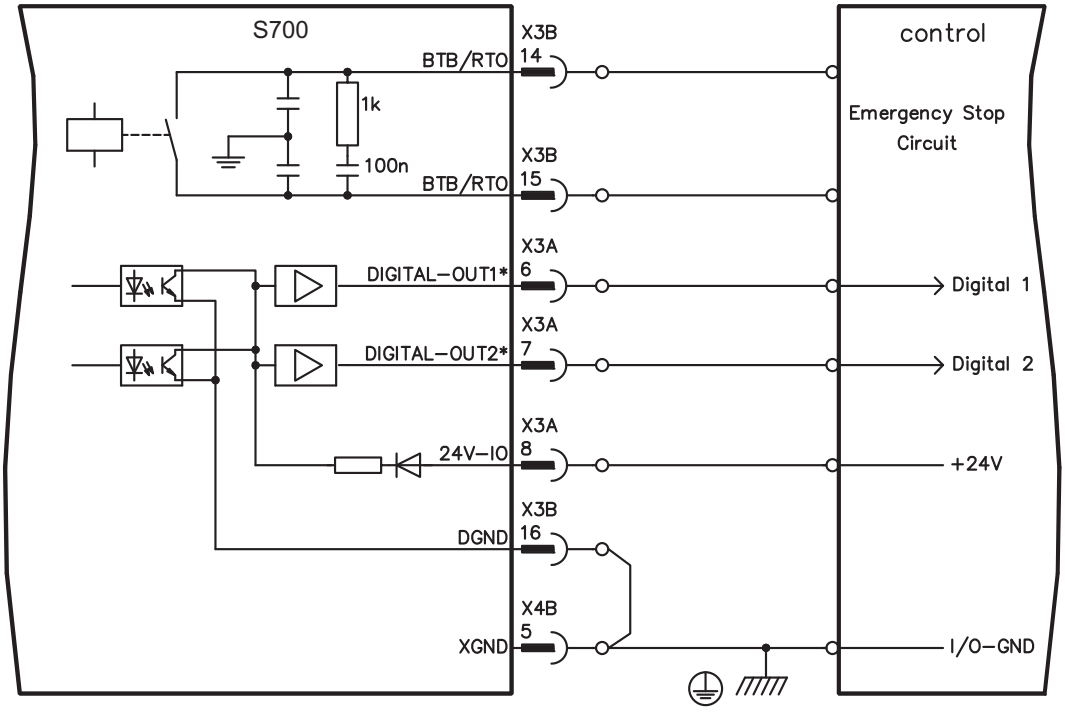

* DIGITAL-OUT 1 and 2 must be defined as outputs using the setup software (“Digital I/O” screen page).

Ready-to-operate contact BTB/RTO (X3B/14, X3B/15)

Operational readiness (terminals X3B/14 and X3B/15) is signaled by a **floating** relay contact. The contact is **closed** when the servo amplifier is ready for operation, and the signal is **not** influenced by the enable signal, the I²t-limit, or the brake threshold.

NOTE

All faults cause the BTB/RTO contact to open and the output stage to be switched off (if the BTB/RTO contact is open, the output stage is inhibited -> no power output). Error messages are listed on page 122.

Programmable digital outputs DIGITAL-OUT 1 and DIGITAL-OUT 2 (X3A/6,X3A/7):

Pins 6 and 7 on X3A can be used as either inputs or outputs. Choose the function you require in the setup software (OxMODE). The outputs are floating outputs, so the 24 V switching voltage must be provided by an external supply.

If they are programmed as digital outputs, messages from pre-programmed functions stored in the servo amplifier can be output here.
A list of these pre-programmed functions can be found on the “I/O digital” screen page of our setup software DRIVEGUI.EXE.

If an output is to be freshly assigned to a pre-programmed function, then the parameter set must be saved in the EEPROM of the servo amplifier and a reset has to be carried out (with the amplifier setup software for example).

7.16 RS232 interface, PC connection (X6)

Operating, position control, and motion-block parameters can be set up by using the setup software on an ordinary commercial PC (see p.109).

Connect the PC interface (X6) of the servo amplifier to a serial interface on the PC, **while the power supply to the equipment is switched off.**

NOTE

Do not use a null-modem power link cable!

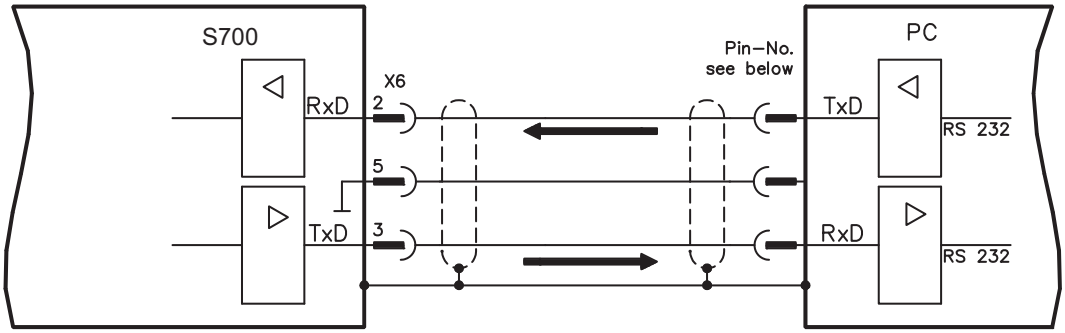

This interface has the same electrical potential as the CANopen interface.

The interface is selected and set up in the setup software.
Further notes on page 108.

With the optional expansion module -2CAN- the two interfaces for RS232 and CAN, which otherwise use the same connector X6, are separated onto two connectors ⇨ p.139).

Interface cable between the PC and servo amplifiers of the S700 series:

(View : looking at the solder side of the SubD sockets on the cable)

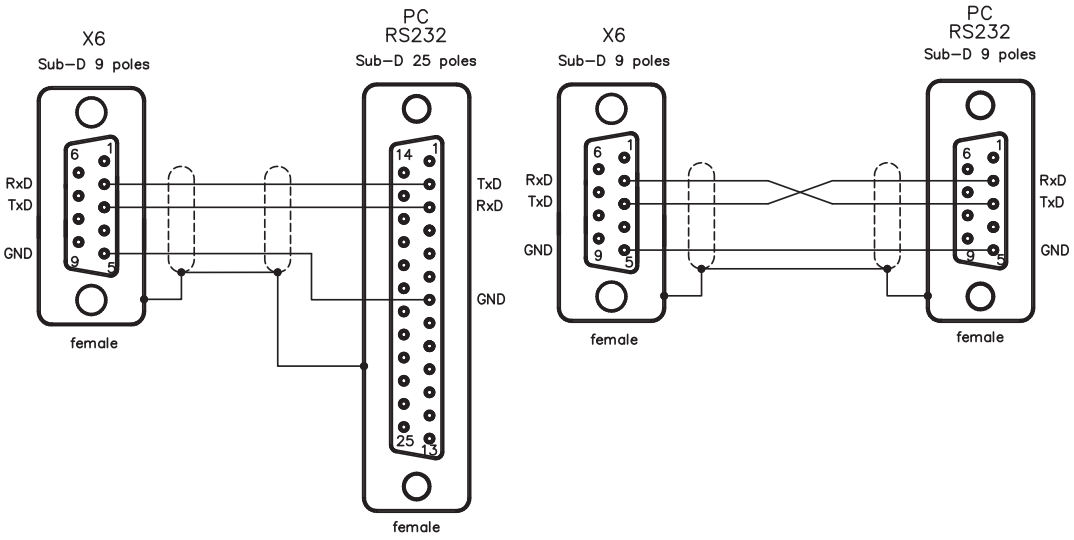

7.17 CANopen interface (X6)

The interface for connection to the CAN-bus (default : 500 kBaud). The integrated profile is based on the CANopen DS301 communication profile and the DS402 drive profile. The following functions are available in connection with the position controller: Jogging with variable speed, homing run (zeroing to reference), start motion task, start direct task, digital setpoint provision, data transmission functions and many others. Detailed information can be found in the CANopen manual. The interface is at the same electrical potential as the RS232 interface. The analog setpoint inputs can still be used. With the optional expansion module -2CAN- the two interfaces for RS232 and CAN, which otherwise use the same connector X6, are separated onto two connectors ⇨ p.139).

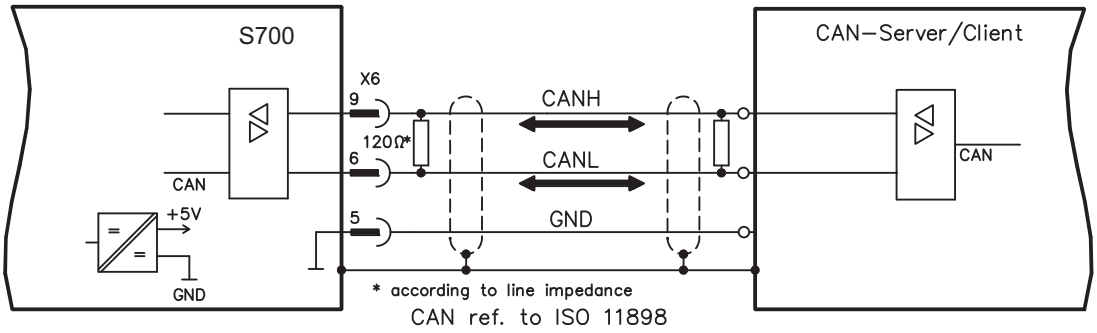

CAN-bus cable

To meet ISO 11898, a bus cable with a characteristic impedance of 120 Ω should be used. The maximum usable cable length for reliable communication decreases with increasing transmission speed. As a guide, you can use the following values which we have measured, but they are not to be taken as assured limits:

Cable data:	Characteristic impedance	100-120 Ω
	Cable capacitance	max. 60 nF/km
	Lead loop resistance	159.8 Ω/km

Cable length, depending on the transmission rate (samples)

Transmission rate (kBaud)	max. cable length (m)
1000	10
500	70
250	115

Lower cable capacitance (max. 30 nF/km) and lower lead resistance (loop resistance, 115 Ω/km) make it possible to achieve greater distances.
(Characteristic impedance 150 ± 5 Ω ⇒ terminating resistor 150 ± 5 Ω).
For EMC reasons, the SubD connector housing must fulfill the following requirements:

— metal or metalized housing
— provision for cable shielding connection on the housing, large-area connection

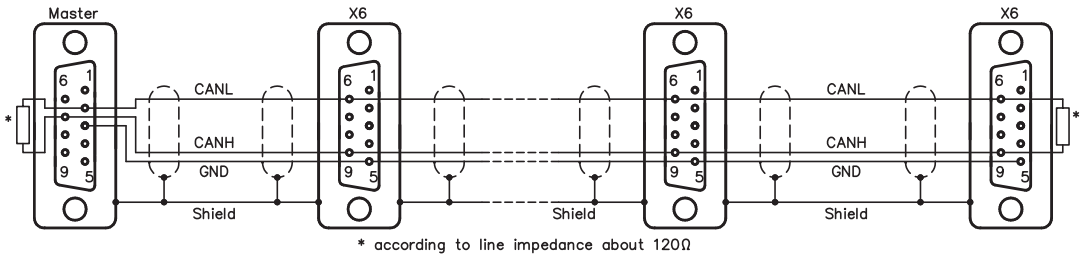

7.18 EtherNET interface (X7)

This interface with its two RJ-45 connectors can be used for communicating with various fieldbus devices depending on the used firmware version:

- EtherCAT(standard, CAN over EtherCAT)

NOTE

The interface is deactivated, if a field bus extension card is inserted to an extension slot. The protocol that has been installed with the firmware must be enabled (ASCII command ETHMODE).
Standard setting: if an EtherCAT connection is detected while booting the servo amplifier, then EtherCAT is activated, otherwise CANopen (see p. 103) is activated

With the Download Tool (on the product CDROM and within the download area of our website) the different firmware versions can be loaded into the servo amplifier.

The communication status is indicated by the built-in LEDs.

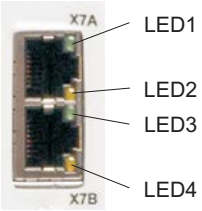

Connector	LED#	Name	Function
X7A	LED1	LINK_IN	ON = receive valid (IN port) OFF= not valid, power off or reset.
	LED2	CYCLIC	ON = network cyclic BLINK = network not cyclic OFF = power off or reset
X7B	LED3	LINK_OUT	ON = receive valid (OUT port) OFF = not valid, power off or reset
	LED4	REPEATER	ON = repeater on, network cyclic BLINK = repeater on, network not cyclic OFF = repeater off, power off or reset

Pinout

X7A	Signal	X7B	Signal
1	Transmit +	1	Receive +
2	Transmit -	2	Receive -
3	Receive +	3	Transmit +
4	n.c.	4	n.c.
5	n.c.	5	n.c.
6	Receive -	6	Transmit -
7	n.c.	7	n.c.
8	n.c.	8	n.c.

7.19 Memory card

In the top of the servo amplifier there is a card reader for memory cards. The firmware and a full set of parameters (with control buttons and setup software) can be stored on the memory card and reloaded onto the servo amplifier.

MMC and SD cards are supported. This function means that a replacement device or identical shafts in standard production machines can be set up very quickly and easily.

Uploads and Downloads from and to the memory card can be started with the keypad or with the setup software using. Operating with ASCII commands is described in the Product-WIKI on page "Memory Card".

NOTE

Always switch off the S700 before inserting or removing the memory card. If an absolute encoder is used, homing must be carried out before the parameters are loaded into a new device.

To download new firmware to an amplifier without a PC connection, proceed as follows:

1. Save the firmware to be programmed onto a memory card under the name “**default.s19**" (S-record format) or ”**default.bin**" (binary format).
2. Disconnect the power to the amplifier (24 V supply OFF) and insert the card in the memory card slot on the amplifier.
3. Press and hold down both operating keys (▲ ▼) and switch on the 24 V supply voltage to the amplifier. “—” appears in the display to indicate that the monitor program has been activated. In case of access problems the drive display shows the letters “CCC”. The interrupted command proceeds after re-insertion of the memory card.
4. Press both operating keys again to start the update process. The progress of the update can be monitored in the display:
   - First, the firmware is downloaded from the card to the internal memory.
   - During this phase, the display counts from 0 to 100.
   - Next, the internal firmware memory is deleted. During this phase, 100 is displayed permanently.
   - Once the firmware memory has been deleted, the firmware is written. This phase is indicated in the display by the display counting backwards from 100 to 0.
5. Once programming has been completed, the firmware is started automatically.

The parameter file can also be loaded automatically on a restart. If a parameter file with the name “**default.par**” has already been saved on the memory card, it will be loaded by the firmware at this point. This allows automatic updating of firmware and parameters.

This page has been deliberately left blank.

8 Setup

The procedure for setup is described as an example. Depending on the application, a different procedure may be appropriate or necessary. In multi-axis systems, set up each servo amplifier individually.

Before setting up, the manufacturer of the machine must generate a risk assessment for the machine, and take appropriate measures to ensure that unforeseen movements cannot cause injury or damage to any person or property.

8.1 Important notes

DANGER

The equipment produces potentially lethal voltages up to 900 V. Risk of electric shock. Only professional personnel with extensive knowledge in the fields of drive technology are allowed to setup the servo amplifier. Check that all connection components that are live in operation are safely protected against bodily contact.

WARNING

There is a danger of electrical arcing when disconnecting connectors, because capacitors can still have dangerous voltages present up to eight minutes after switching off the supply power.
Risk of burns and blinding. The contacts become damaged.
Never undo any electrical connections to the servo amplifier while it is live. Wait at least eight minutes after disconnecting the servo amplifier from the main supply power before touching potentially live sections of the equipment (e.g. contacts) or undoing any connections.
To be sure, measure the voltage in the DC Bus link and wait until it has fallen below 60V.

WARNING

The drive might restart automatically after power on, depending on the parameter setting. Risk of death or serious injury for humans working in the machine. If the parameter AENA is set to 1, then place a warning sign to the machine (Warning: Automatic Restart at Power On) and ensure, that power on is not possible, while humans are in a dangerous zone of the machine.

NOTICE

If the servo amplifier has been stored for more than 1 year, it will be necessary to re-form the capacitors in the DC bus link circuit. To do this, disconnect all electrical connections and apply single-phase 208...240 V AC to terminals L1 and L2 of the servo amplifier for about 30 minutes. This will re-form the capacitors.

NOTE

Additional information on setting up the equipment:
The adaptation of parameters and the effects on the control loop behavior are described in the online help of the setup software.
The setting up of any expansion card that may be fitted is described in the corresponding manual on the CD-ROM.
We can provide further know-how through training courses (on request).

8.2 Setup software

This chapter describes the installation of the setup software DRIVEGUI.EXE for the S700 digital servo amplifiers.

We offer training and familiarization courses on request.

8.2.1 Use as directed

The setup software is intended to be used for altering and saving the operating parameters for the S700 series of servo amplifiers. The attached servo amplifier can be set up with the help of this software, and during this procedure the drive can be controlled directly by the service functions.

Only professional personnel who have the relevant expertise described on page 11 are permitted to carry out online parameter setting for a drive that is running.

Sets of data that have been stored on data media are not safe against unintended alteration by other persons. After loading a set of data you must therefore always check all parameters before enabling the servo amplifier.

8.2.2 Software description

The servo amplifiers must be adapted to the requirements of your machine.
Usually you will not have to carry out this parameter setting yourself on the amplifier, but on a PC, with the assistance of the setup software. The PC is connected to the servo amplifier by a null-modem cable (serial, see p.102). The setup software provides the communication between the PC and S700.

You can find the setup software on the accompanying CD-ROM and in the download area of our website.

With very little effort you can alter parameters and instantly observe the effect on the drive, since there is a continuous (online) connection to the amplifier. At the same time, important actual values are read out from the amplifier and displayed on the monitor of the PC (oscilloscope functions).

Any expansion cards built into the amplifier are automatically recognized, and the additional parameters which are required for position control or motion-block definition are made available.

You can save sets of data on data media or on the memory card (archiving) and load them again. You can also print out the data sets.

We supply you with motor-specific default sets of data for the most common combinations of servo amplifier and motor. In most applications you will be able to use these default values to get your drive running without any problems.

An extensive online help with integrated description of all variables and functions supports you in each situation.

8.2.3 Hardware requirements, operating systems

The PC interface (X6, RS232) of the servo amplifier is connected to the serial interface of the PC by a null-modem cable (**not a null-modem link cable!**) (⇨ p.102).

NOTICE Connect or disconnect the interface cable only when the electrical supply is switched off for both the PC and the servo amplifier.

The interface in the servo amplifier has the same potential level as the CANopen interface.

Minimum requirements for the PC:

Processor	:	at least Pentium® II or comparable
Graphics adapter	:	Windows compatible, color
Drives	:	hard disk with at least 10 MB free space CD-ROM drive
Interface	:	one free serial interface (COM1 … COM10) or USB with an USB->Serial converter

Operating systems WINDOWS 2000, XP, VISTA, 7

DRIVEGUI.EXE will run under WINDOWS 2000, XP, VISTA and 7.

Emergency operation is feasible through an ASCII terminal emulation (without graphical user interface).
Interface settings : 38400 bps, databit 8, no parity, stopbit 1, no flow control

Operating systems Unix, Linux

The functioning of the software has **not** been tested for WINDOWS running within Unix or Linux.

8.2.4 Installation under WINDOWS

The CD-ROM includes an installation program for the setup software.

Installation

Autostart function activated:
Insert the CD-ROM into a free drive. A window with the start screen opens. There you find a link to the setup software DRIVEGUI.EXE. Click it and follow the instructions.

Autostart function deactivated:
Insert the CD-ROM into a free drive. Click on **START** (task bar), then on **Run**. Enter the program call: **x:\index.htm** (x = correct CD drive letter).
Click **OK** and proceed as described above.

Connection to the serial interface of the PC:
Connect the interface cable to a serial interface on your PC (COM1 to COM10) and to the serial interface of the servo amplifier S700 (⇨ p.102).

8.3 Quickstart

8.3.1 Preparation

Unpacking, Mounting and Wiring the Servo Amplifier

1. Unpack servo amplifier and accessories

2. **Observe safety instructions in the manuals**

3. Mount the servo amplifier as described in chapter 6

4. Wire the servo amplifier as described in chapter 7 or apply the minimum wiring for drive testing as described in chapter 8.3.1

5. Install the software as described in chapter 8.2

6. You need this information concerning the drive components:
   - rated mains supply voltage
   - motor type (motor data, if the motor type is not listed in the motor database, see online help
   - feedback unit built into the motor (type, poles, lines, protocol etc.)
   - moment of inertia of the load

Documents

You need access to these documents (located on the product CD-ROM, you can download the latest editions from our website):

- Instruction manual (this manual)
- CANopen Fieldbus Interface Manual
- EtherCAT Fieldbus Interface Manual
- Accessories manual

Depending on the installed expansion card you need one of these documents:

- Operating Manual Safety Expansion Card Sx
- PROFIBUS DP Fieldbus Interface Manual
- DeviceNet Fieldbus Interface Manual
- sercos® Fieldbus Interface Manual

You need Acrobat Reader to read the PDFs, an installation link is on every screen of the product CD-ROM.

Minimum Wiring for Drive Test

NOTE This wiring does not fulfill any requirements to safety or functionality of your application, it just shows the required wiring for drive testing without load.

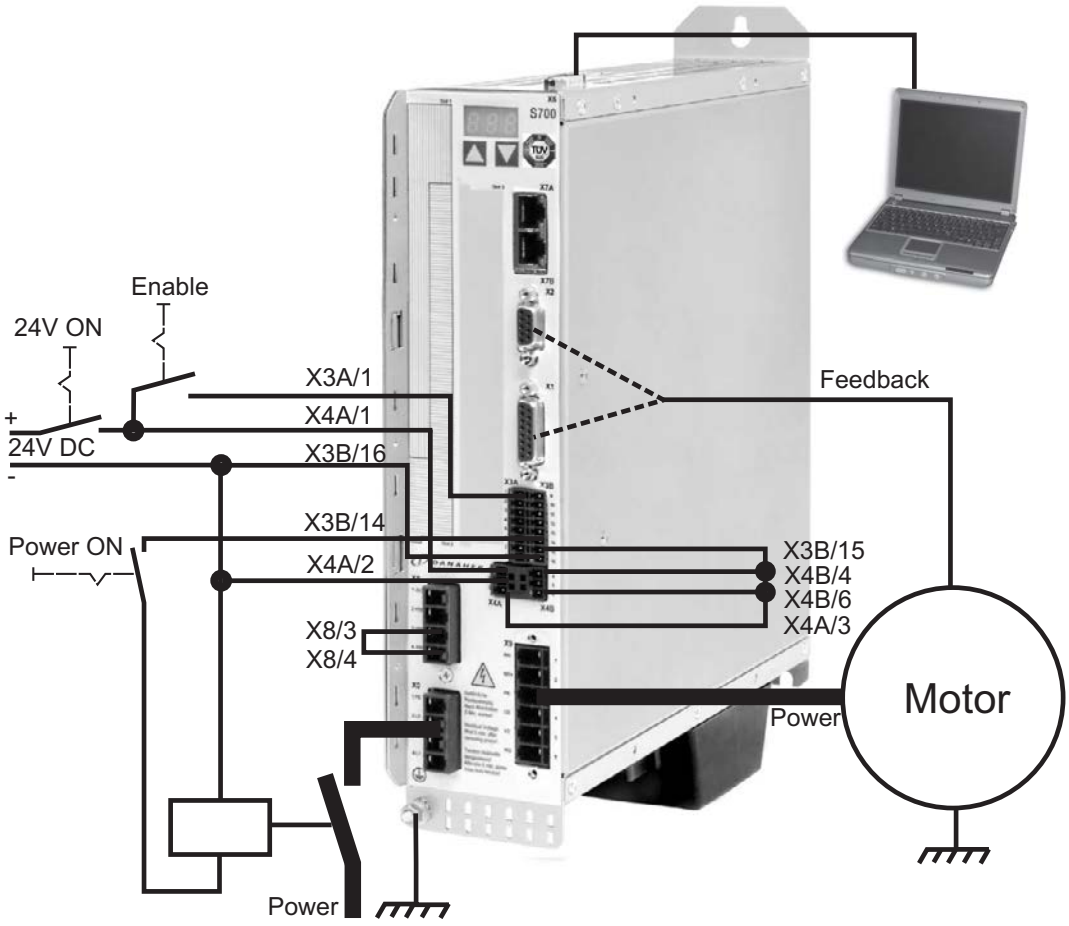

8.3.2 Connect

- Connect the interface cable to a serial interface on your PC and to the serial interface X6 of the servo amplifier. USB to serial converter can be used optionally.
- Switch on the 24 V power supply for the servo amplifier.
- Wait about 30 seconds, until the front display of the servo amplifier displays the current class (e.g. 08 for 3 A). If the power supply voltage is switched on, too, a leading P is displayed (e.g. P08 for Power, 3 A).

NOTE

If a fault code (F.xx) or a warning (A.xx) or a status message (./_ / E/S) appears in the display, you will find the description on page 122 and 123.
If a fault message appears, fix the problem.

Double-Click the DRIVEGUI.EXE icon on your Windows desktop to start the software.

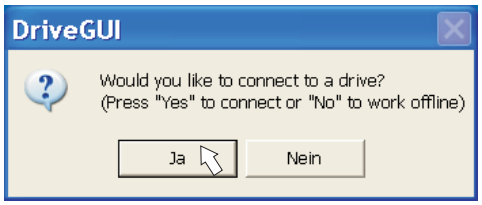

You can work offline or online with DRIVEGUI.EXE. Work ONLINE now.

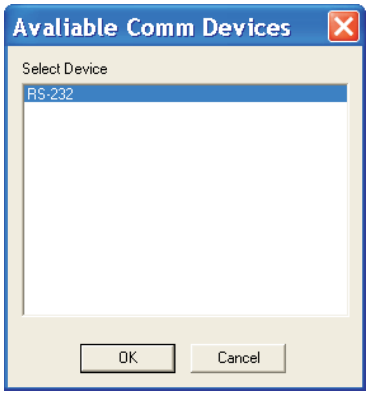

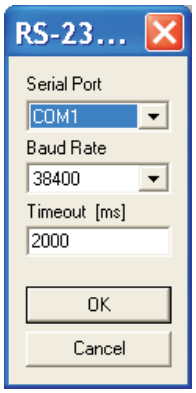

If the communication is started for the first time, you have to setup the communication parameters.
Choose the communication system and the interface, where the servo amplifier is connected to.
Click OK.

The software tries to communicate with these parameters. If it's not successful, you receive this error message:

Frequent causes:
- wrong interface chosen
- wrong connector chosen at the servo amplifier
- interface is used by another software
- 24 V auxiliary voltage for the servo amplifier not working
- interface cable broken or wrong wiring

Quit the error message. The software starts in the offline mode now, that requires the manual selection of the amplifier's type. Quit this selection by closing the window.
Fix the communication problem. Restart the software in Online mode.

If communication works, you see the start screen. Select "Setup Wizard" in the navigation frame.

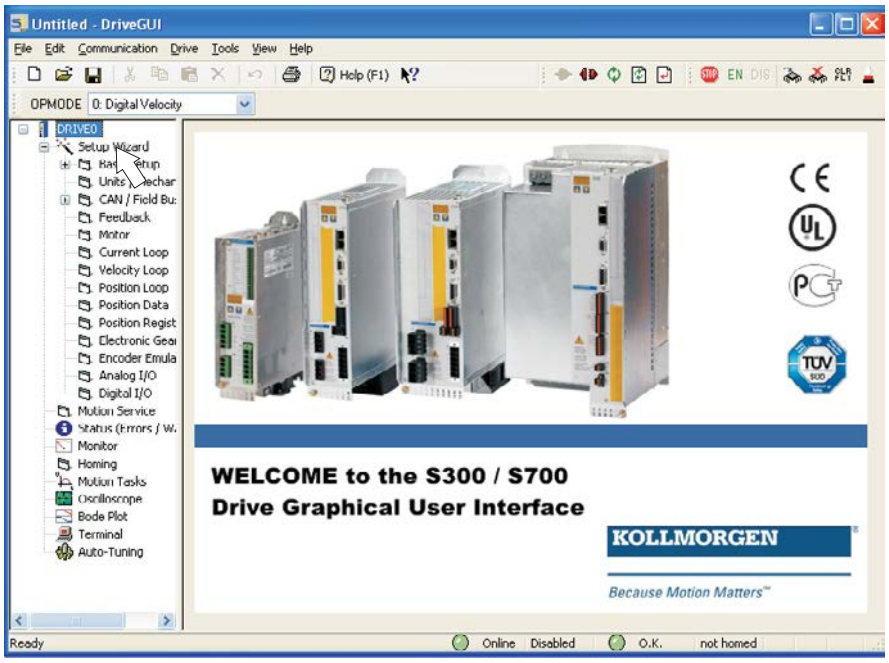

NOTICE Make sure, that the amplifier is disabled (Input Enable connector X3A pin 1 must be 0 V or open)!

8.3.3 Important Screen Elements

Help Function

The Online-Help gives detailed information to all parameters the servo amplifier can work with.

Key F1	Starts online help for the actual screen page.
Menu bar Help	Starts online help with the first page.
	Context Help. Click the help symbol first. Then click the function for which you need help.

Tool Bar

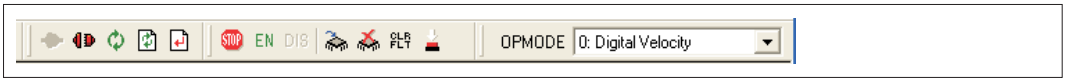

	Save to EEPROM, required if you changed parameters.
	Reset, required if you changed configuration parameters.
	Operation Mode, **use "0: Digital Velocity" mode for drive testing.**

Status Bar

The status bar shows a green Online symbol, indicating that the communication works.

8.3.4 Setup Wizard

The Setup Wizard leads you through the necessary steps for configuring your servo amplifier. Depending on the selected application, only the active screen pages are necessary.

For a quick setup / drive test, select the setup type "Quick Motor/Drive Setup".

Start the Wizard.

8.3.4.1 Basic Setup

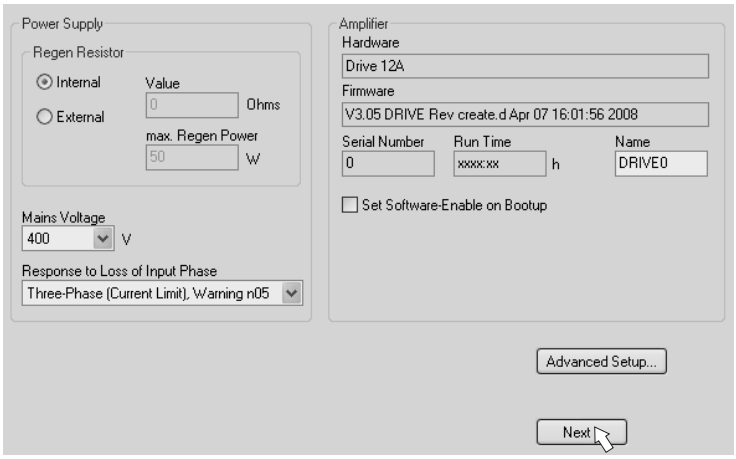

Basic parameters are set here.

Response to Loss of Input Phase: Select Single-Phase or Three-Phase operation. With three-phase operation you can select either warning "n05" or error "F19" in case of phase loss. The reaction "F19" disables the output stage, "n05" is just a message.
Name: You can enter a name for the servo amplifier (up to 8 characters). This simplifies the drive identification in the system.
Set Software Enable on Bootup: Don't select this option for the quick test.

Click NEXT.

8.3.4.2 Units/Mechanical

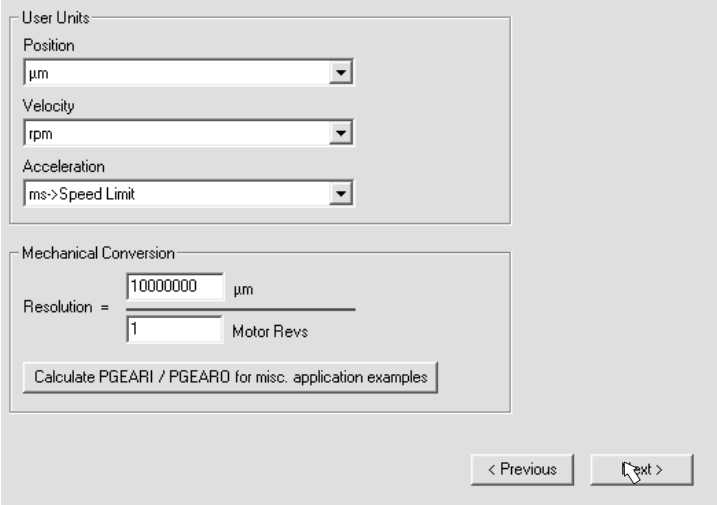

The user units for all input fields in the setup software can be preselected here.

Position, Velocity, Acceleration
Select usable units for your application referring to the moved load.
Mechanical Conversion
The relationship between motor shaft revolution (pole pair pitch with linear motors) and motion distance of the load is specified here. Gear ratio can be calculated here as well. Detailed information can be found in the online help.
Use the tool based on sample applications for calculating the resolution value:

Calculate PGEARI/PGEARO for..." button

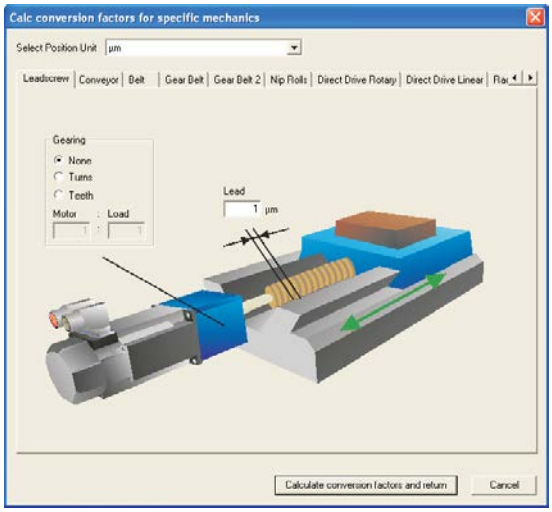

If your application does not correspond to any of the listed examples, enter the required parameters directly in the fields on the “Units” screen.

First, select the application that corresponds to your own. Next, set the position unit. Select the position unit that provides you with the required accuracy for your application. Set the mechanical data for you application now. If a gearhead is flange-mounted on the motor, you must also enter the gearhead data (either the number of teeth or the ratio of the revolutions).
Then click the “Calculate conversion factors and return” button.

Click NEXT.

8.3.4.3 Motor (rotary) / Feedback

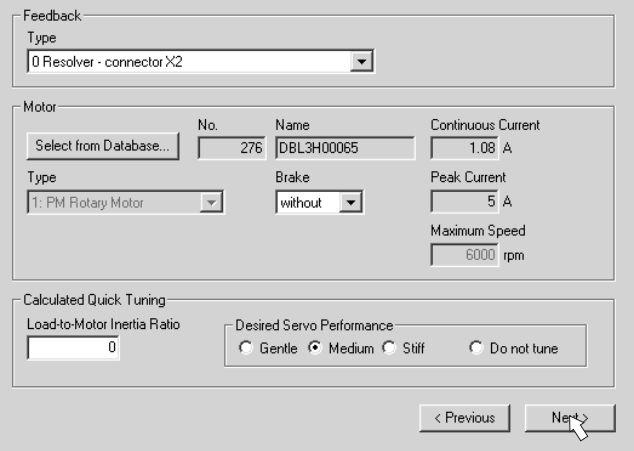

Simplified setting of the motor related parameters.

NOTE

Feedback: Select the feedback system used in the motor.
Resolver is fixed to 2 pole in the Quick Motor/Drive Setup.
Change "pole n°" on feedback screen in Complete Setup later, if required.

Motor type: Click the button "**Select from Database...**".
Open the database file (mdb_ _ _.csv) and select the used motor out of the list. Special motors must be defined in the "Complete Setup".

Brake: If the amplifier shall control a brake, change the Brake parameter to "With"

Calculated quick tuning: If you know the Load-to-motor inertia ratio (0 is for no load), enter the number here and select the desired servo performance. If you don't know the inertia ratio, select "Do not tune". **Click FINISH.**

8.3.4.4 Motor (linear) / Feedback (Encoder)

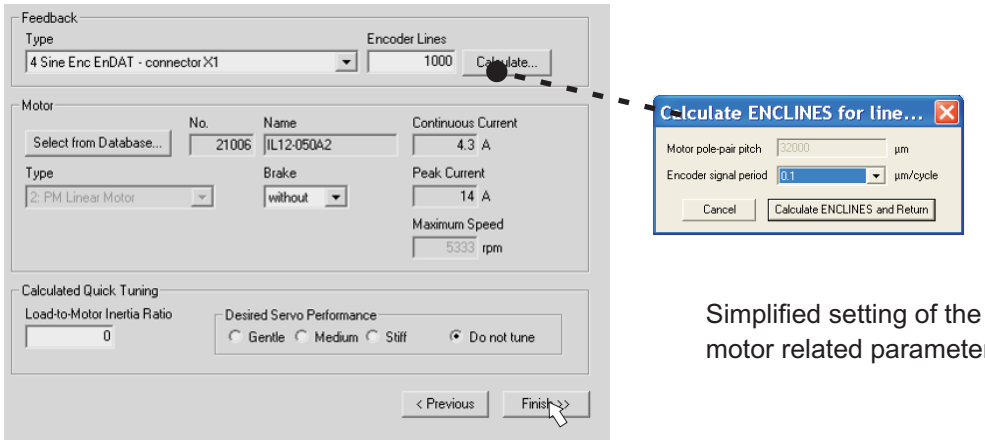

Simplified setting of the motor related parameters.

Feedback: Select the feedback system used.

Motor type: Click the button "**Select from Database..**".
Open the database file (mdb_ _ _.csv) and select the used motor. Special motors must be defined in the "Complete Setup".

Encoder Lines (appears with Feedback Type Sine Encoder):
Click "Calculate" and fill in the Encoder signal period.

Brake: If the amplifier shall control a brake, change the Brake parameter to "With"

Calculated quick tuning: If you know the Load-to-motor inertia ratio, enter the number here and select the desired servo performance. Otherwise select "Do not tune".

Click FINISH.

8.3.4.5 Save Parameters and Restart

You are going to finish the Setup Wizard and you have changed several basic parameters. Depending on the parameters you changed, two possible reactions will occur now:

Configuration parameters changed

A warning appears, that you have to restart the amplifier, this is called "coldstart".

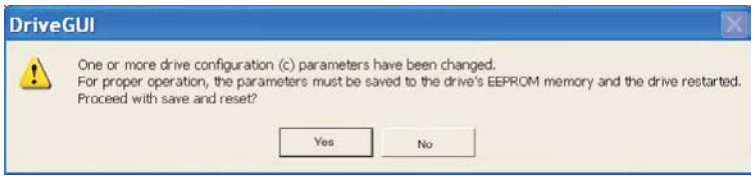

Click "YES".
The parameters are saved to the amplifier's EEPROM automatically and a reset command restarts the amplifier (takes some seconds).

Other parameters changed

No warning appears. Save the parameters to the EEPROM of the servo amplifier manually by clicking the symbol in the tool bar. A coldstart of the amplifier is not necessary.
Select the screen "**Motion Service**" in the navigation frame.

8.3.5 Motion Service (Jog Mode)

NOTICE

Be aware that the actual position of the load permits the subsequent moving operations. The axis could move to the hardware limit-switch or the mechanical stop. Make sure that a jerk or a fast acceleration of the load cannot cause any damage.
Observe the "safe reduced speed" requirements for your application!

- Switch on the power supply for the drive.
- **STO-Enable:** Apply +24 V to STO1-Enable [X4B/6] and STO2-Enable [X4A/3]
- **Hardware-Enable**: Apply +24 V to the input Enable [X3A/1]. If STO-Enable is missed or the sequence was wrong, the front display shows .
- **Software-Enable**: Click the symbol in the tool bar. Now the front display shows an E and the current class (e.g. for Enable, 3 A). Click the symbol to switch off the output stage (disable).

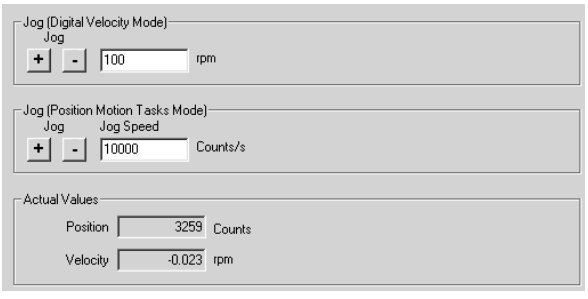

Jog (Digital Velocity Mode):
You can move the drive with constant speed. Enter the desired speed.
The drive moves with the preset speed when the + or – button is pressed. It stops when the button is released.

Actual errors and warnings are listed on the screen "**Status**". A description of errors and warnings can be found in the online help or on p.122ff.
Now you have setup and tested the basic functions of the drive successfully.

8.3.6 More Setup Screens

NOTICE

Observe the safety instructions in the manuals and in the online help before you change parameters in the additional setup screens.

For all setup functions detailed information can be found in the online help system and the integrated command reference.

Select "Complete Setup" in the Setup-Wizard. Now you have access to:

- **CAN-/Fieldbus-settings**: setup address and baudrate
- **Feedback**: Adjust the used feedback unit
- **Motor**: Adjust the used motor
- **Control Loops**: Current-, Velocity- and Position-Loops can be optimized
- **Position Data**: Adjust the position control for the requirements of your application.
- **Position Registers**: up to 16 position values in the motion way can be monitored.
- **Electronic Gearing**: If the servo amplifier will follow a setpoint as a slave with a gear ratio, you can select the gearing source here and define the gear ratio.
- **Encoder Emulation**: select the encoder emulation (position output)
- **Analog I/O**: setup the analog inputs
- **Digital I/O**: setup the digital inputs and digital outputs
- **Status (Errors/Warnings)**: displays amplifiers data with history, actual faults and warnings
- **Monitor**: displays the drive data (actual values)
- **Homing**: definition and start of homing
- **Motion task**: definition and start of motion task
- **Oscilloscope**: 4 channel oscilloscope with multiple functionality
- **Bode Plot**: tool for optimizing the drive
- **Terminal**: setup the servo amplifier with ASCII commands
- **Expansion Card**: depending on the built-in expansion card a menu appears
- **Autotuning**: fast tuning of the velocity controller

8.4 Multi axis system

With a special cable you can connect up to 255 servo amplifiers to your PC: cable type -SR6Y- (for four amplifiers) or -SR6Y6- (for six amplifiers) see Accessories Manual.

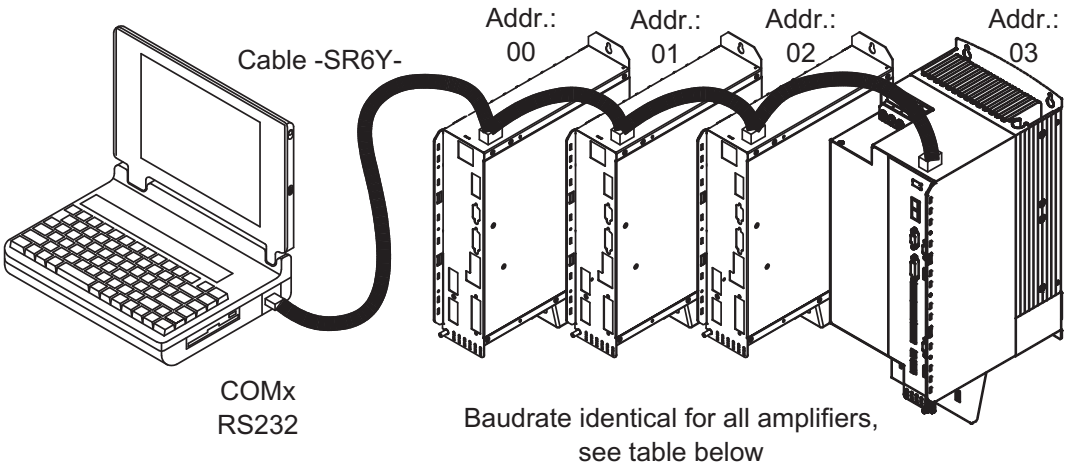

With the PC connected to only one amplifiers you can select every amplifier in the system via the set station address with the setup software.

Station address for CAN-bus

You can use the keypad on the front panel to preset the station addresses for the individual amplifiers and the baud rate for communication (⇨ p.121). Usually the setup software is used to set all parameters.

Baud rate for CAN-bus

NOTE

After changing the station address and baud rate you must turn the 24V auxiliary supply for the servo amplifier off and on again.

Coding of the Baud rate in the LED display :

Coding	Baud rate in kbit/s	Coding	Baud rate in kbit/s
1	10	25	250
2	20	33	333
5	50	50	500
10	100	66	666
12	125	80	800
		100	1000

8.5 Keypad operation and LED display

This section illustrates the two possible operating menus and the use of the keys on the front panel. Normally, the S700 only presents the standard menu for your use. If you want to operate the amplifier via the detailed menu, you must keep the right key pressed while switching on the 24V supply.

8.5.1 Keypad operation

The two keys can be used to perform the following functions:

Key symbol	Functions
▲	**press once** : move up one menu item, increase number by one **press twice in rapid succession** : increase number by ten
▼	**press once** : decrease number by one **press twice in rapid succession** : decrease number by ten
▲ ▼	**hold right key pressed, and then press left key as well** : to enter a number, “Return” function

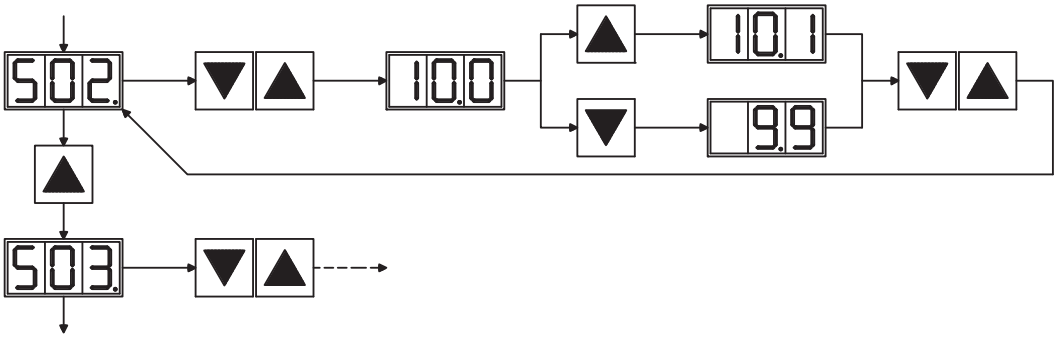

8.5.2 Status display

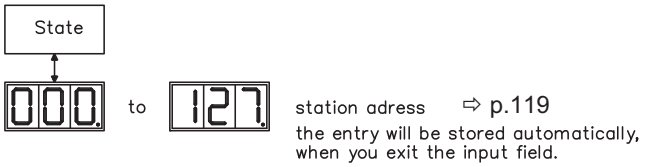

8.5.3 Standard menu

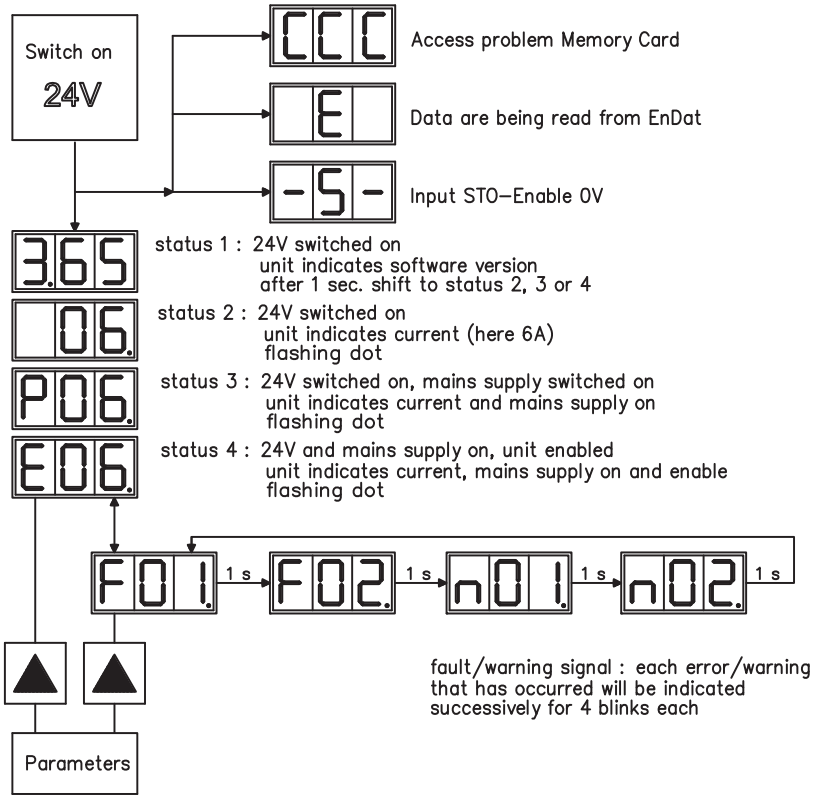

8.5.4 Advanced menu

NOTE To operate the amplifier via the detailed menu, you must keep the right key pressed while switching on the 24 V supply.

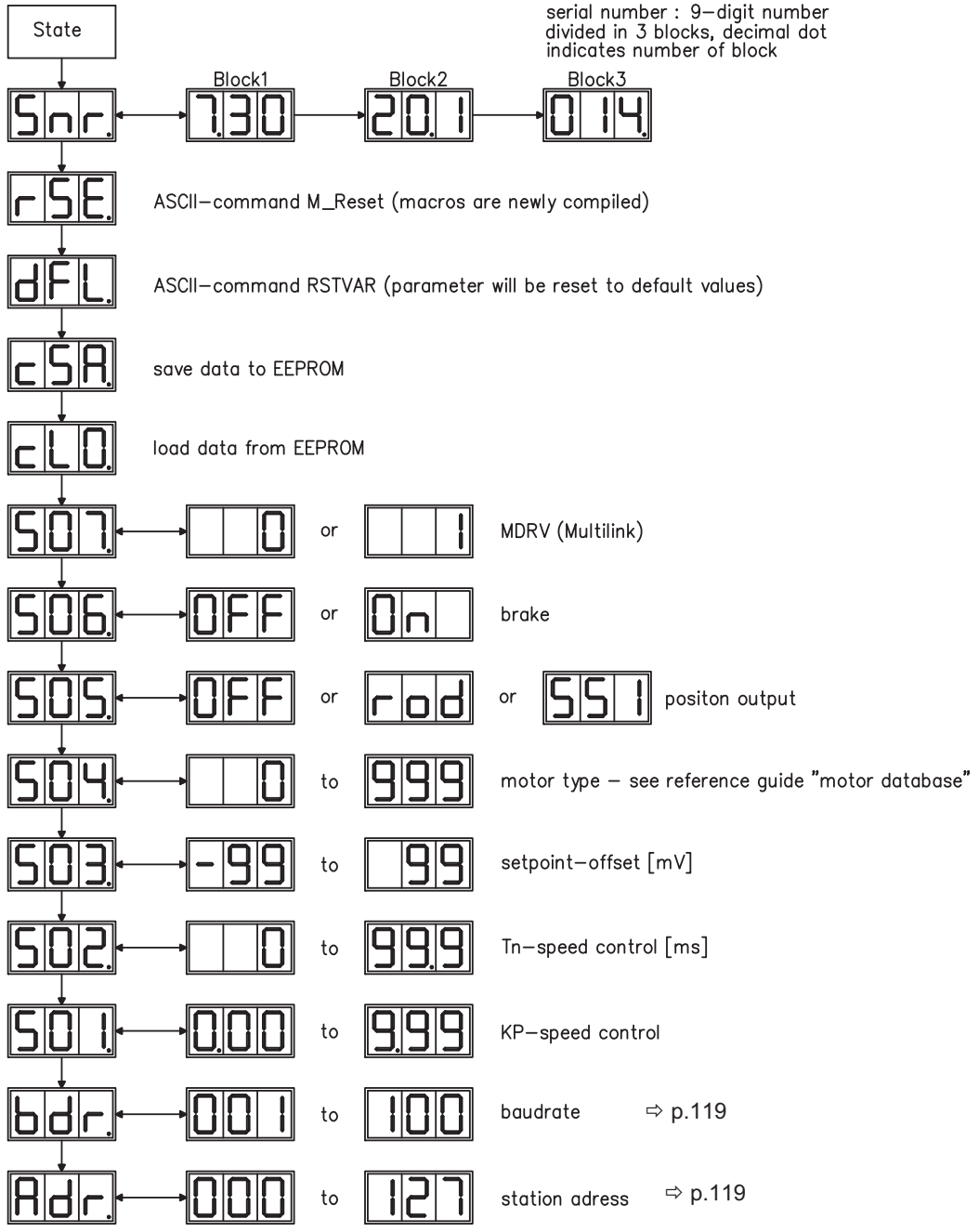

8.6 Error messages

Any errors that occur are shown in coded form by an error number in the LED display on the front panel.
The servo amplifier reaction depends on the fault and on the setting of parameter ACTFAULT.
Faults can be reset by hardware reset of the servo amplifier or depending on the fault (see ERRCODE) by ASCII command CLRFAULT.

Number	Explanation (=> ASCII Reference ERRCODE)	
E / P	Status Messages	Status messages, no error, see p. 120
. . .	Status Message	Amplifier is updating the startup configuration
-	Status Message	Status message, no error, programming mode
- S -	STO-Enable	STO inputs are 0V (with disabled drive only)
CCC	Memory Card	Access problems memory card
F01	Heat Sink Temperature	Heat sink temperature too high (default: 80°C)
F02	Overvoltage	Overvoltage in DC bus link. Limit depends on the electrical supply voltage
F03	Following Error	Message from the position controller
F04	Feedback	Cable break, short-circuit, short to ground
F05	Undervoltage	Undervoltage in DC bus link (default: 100 V)
F06	Motor Temperature	Motor temperature too high or temp. sensor defect
F07	Internal Voltages	Internal supply voltages not ok
F08	Overspeed	Motor runs away, speed is too high
F09	EEPROM	Checksum error
F10	Reserved	Reserved
F11	Brake	Cable break, short-circuit, short to ground
F12	Motor Phase	Motor phase missing (e.g. cable break), in process
F13	Ambient Temperature	Ambient temperature too high
F14	Output Stage	Fault in the power output stage, also with wrong motor cable or insufficient cable shielding
F15	I^2t max.	I^2t maximum value exceeded
F16	Mains BTB/RTO	2 or 3 phases missing in the mains supply feed
F17	A/D Converter	Error in the analog-digital conversion, normally caused by extreme electromagnetic interference
F18	Brake Circuit	Brake circuit faulty or incorrect setting
F19	DC Bus Link	DC bus link breakdown
F20	Slot Error	Slot error, depends on the type of expansion card (see ASCII object reference)
F21	Handling Error	Handling error on the expansion card
F22	Reserved	Reserved
F23	CAN-Bus Off	Severe CAN bus communication error
F24	Warning	Warning is displayed as fault
F25	Commutation Error	Commutation error
F26	Limit Switch	Hardware limit switch error on homing move
F27	STO	Operational error with STO, input for STO-Enable and ENABLE have been set at the same time
F28	Fieldbus Error	Fieldbus error (see ASCII command reference)
F29	Fieldbus Error	Fieldbus error (see ASCII command reference)
F30	Emergency Timeout	Timeout emergency stop
F31	Safety Supervision	Safety card error. Error code follows: oXX=error number, iYY=error subindex
F32	System Error	System software not responding correctly

NOTE More information to the messages and trouble shooting can be found in the ASCII Object Reference and in the Online Help).

8.7 Warning messages

Faults which occur, but which do not cause a switch-off of the amplifier output stage (BTB/RTO contact remains closed), are indicated in the LED display on the front panel by a coded warning number.

Some warning messages result in a controlled shut-down of the drive (braking by emergency stop ramp).
The servo amplifier reaction depends on the warning (see STATCODE).

Number	Designation	Explanation (=> ASCII Reference STATCODE)
E / P	Status Messages	Status messages, no warning, see p. 120
. . .	Status Message	Amplifier is updating the startup configuration
- S -	STO-Enable	STO-Enable input is 0V (with disabled drive only)
-	Status Message	Status message, no warning, programming mode
n01	I²t	I²t threshold exceeded
n02	Brake power	Reached preset brake power limit
n03	S_fault	Exceeded preset following error limit
n04	Response monitoring	Response monitoring (fieldbus) has been activated
n05	Supply phase	Mains supply phase missing
n06	SW limit switch 1	Software limit switch 1 underrun
n07	SW limit switch 2	Software limit switch 2 overrun
n08	Motion task error	A faulty motion task was started
n09	No reference point	No reference point (Home) set at start of motion task
n10	PSTOP	PSTOP limit-switch activated
n11	NSTOP	NSTOP limit-switch activated
n12	Motor default values loaded	Only for ENDAT or HIPERFACE® : discrepancy between motor number saved in the encoder and the amplifier, motor default values loaded
n13	Expansion card	24V DC supply for I/O expansion card not ok
n14	SinCos feedback	SinCos commutation (wake & shake) not completed, will be canceled when amplifier is enabled and wake & shake carried out
n15	Reserve	Reserve
n16	Summarized warning	Summarized warning for n17 to n31
n17	Fieldbus-sync	CAN sync is not logged in
n18	Multiturn overflow	Max. number of motor turns exceeded
n19	Motion task ramps are limited	Range overflow on motion task data
n20	Invalid motion task	Invalid motion task
n21	PLC program error	For details see PLC code
n22	Max.motor temperature reached	The user can shut down the process before the temperature error will interrupt the process immediately
n23	Sin Cos feedback	Warning level reached
n24	Digital I/O	Configuration is not logical
n25-n31	Reserve	Reserve
n32	Firmware beta version	Firmware is an unreleased beta version

NOTE More information to the messages can be found in the ASCII Object Reference and in the Online Help).

8.8 Trouble Shooting

There may be a wide variety of reasons for the fault, depending on the conditions in your installation. In multi-axis systems there may be further hidden causes of a fault.

NOTE

Detailed hints for removal of faults can be found in the online help chapter "Trouble-Shooting".

Our customer service can give you further assistance with problems.

Fault	Possible causes	Measures
HMI message: Communication fault	— wrong cable used — cable plugged into wrong position on servo amplifier or PC — wrong PC interface selected	— use null-modem cable — plug cable into the correct sockets on the servo amplifier and PC — select correct interface
Motor does not rotate	— servo amplifier not enabled — software enable not set — break in setpoint cable — motor phases swapped — brake not released — drive is mechanically blocked — motor pole no. set incorrectly — feedback set up incorrectly	— apply ENABLE signal — set software enable — check setpoint cable — correct motor phase sequence — check brake control — check mechanism — set motor pole no. — set up feedback correctly
Motor oscillates	— gain is too high (speed controller) — feedback cable shielding broken — AGND not wired up	— reduce Kp (speed controller) — replace feedback cable — join AGND to CNC-GND
Drive reports following error	— I_{rms} or I_{peak} set too low — accel/decel ramp is too long	— increase I_{rms} or I_{peak} (keep within motor ratings!) — shorten ramp +/-
Motor overheating	— I_{rms}/I_{peak} is set too high	— reduce I_{rms}/I_{peak}
Drive too soft	— Kp (speed controller) too low — Tn (speed controller) too high — ARLPF / ARHPF too high — ARLP2 too high	— increase Kp (speed controller) — use motor default value for Tn (speed controller) — reduce ARLPF / ARHPF — reduce ARLP2
Drive runs roughly	— Kp (speed controller) too high — Tn (speed controller) too low — ARLPF / ARHPF too low — ARLP2 too low	— reduce Kp (speed controller) — use motor default value for Tn (speed controller) — increase ARLPF / ARHPF — increase ARLP2
Axis drifts at setpoint = 0V	— offset not correctly adjusted for analog setpoint provision — AGND not joined to the controller-GND of the controls	— adjust offset (analog I/O) — join AGND and controller-GND

9 Expansions

You can find information about availability and order numbers on page 161.

9.1 Expansion cards for slot 1

9.1.1 Guide to installation of expansion cards in slot 1

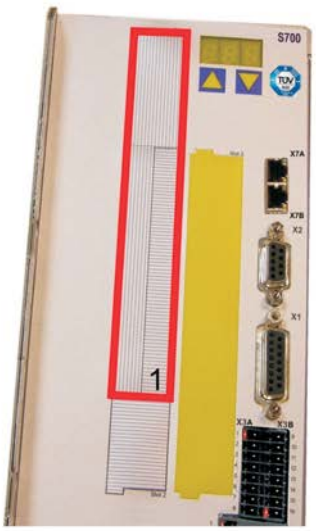

1 - Boundary of SLOT1

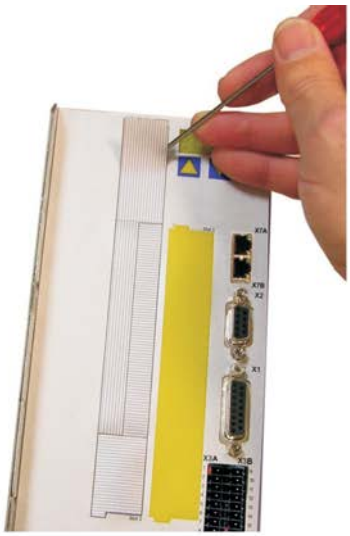

2 - Detach the film (at the perforations)

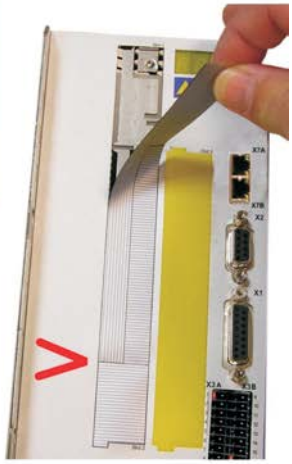

3 - Tear off the film (as far as the mark)

4 - Break the top rib

5 - Break the bottom rib

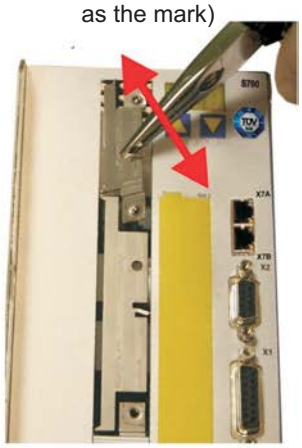

6 - Pull out the top plate

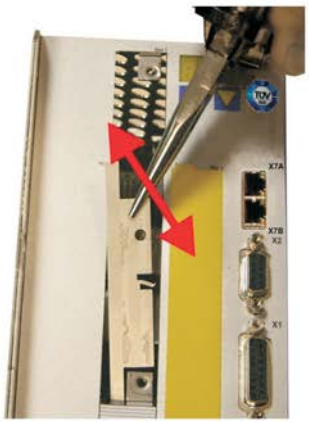

7 - Pull out the bottom plate

8 - Push in the card

9 - Fasten the screws

9.1.2 Expansion card -I/O-14/08-

This section describes the additional features that the expansion card -I/O-14/08- provides for the S700. If you ordered the expansion card together with the servo amplifier, then it will be delivered already inserted into the expansion slot of the servo amplifier and screwed in place.
The -I/O-14/08- provides you with 14 additional digital inputs and 8 digital outputs. The functions of the inputs and outputs are adjustable with the setup software.

NOTE The 24V DC voltage must be supplied by an electrically isolated power supply (e.g. with isolating transformer).

The I/Os are used to initiate the motion tasks that are stored in the servo amplifier and to evaluate signals from the integrated position control in the higher-level control system. The functions of the inputs and signal outputs correspond to the functions that can be assigned to the digital I/Os on connector X3. All inputs and outputs are electrically isolated from the servo amplifier by optocouplers.

9.1.2.1 Technical data

Control inputs	24V / 7mA , PLC-compatible, IEC 61131
Signal output	24V / max. 500mA , PLC-compatible, IEC 61131
Supply inputs, to IEC 61131	24V (18 … 36V) / 100mA plus total current of the outputs (depends on the input wiring of the controls)
Fusing (external)	4 AT
Connectors	MiniCombicon, 12-pin, coded on PIN1 and 12
Cables	Data – up to 50m long : 22 x 0.5 mm², unshielded, Supply – 2 x 1mm², check voltage drop
Waiting time between 2 motion tasks	depends on the response time of the control system
Addressing time (minimum)	4ms
Starting delay (maximum)	2ms
Response time of digital outputs	max. 10ms

9.1.2.2 LEDs

Two LEDs are mounted next to the terminals on the expansion card. The green LED signals that the 24V auxiliary supply is available for the expansion card. The red LED signals faults in the outputs from the expansion card (overload of switching components, short-circuit).

9.1.2.3 Entering a motion block number (example)

Motion block number	A7	A6	A5	A4	A3	A2	A1	A0
binary 1010 1110	1	0	1	0	1	1	1	0
decimal 174	128	-	32	-	8	4	2	-

9.1.2.4 Connector assignments

The functions are adjustable with the setup software. In the table below the default values are described.

Connector X11A			
Pin	**Dir**	**Default function**	**Description**
1	In	A0	Motion block number, 2^0, LSB
2	In	A1	Motion block number, 2^1
3	In	A2	Motion block number, 2^2
4	In	A3	Motion block number, 2^3
5	In	A4	Motion block number, 2^4
6	In	A5	Motion block number, 2^5
7	In	A6	Motion block number, 2^6
8	In	A7	Motion block number, 2^7, MSB
9	In	Reference	Polls the home switch. If a digital input on the base unit is used as a home input, then the input on the expansion card will **not** be evaluated.
10	In	F_error_clear	Clears the warning of a following error (n03) or the response monitoring (n04)
11	In	Start_MT_Next	The following task, that is defined in the motion task by “Start with I/O” is started. The target position of the present motion task must be reached before the following task can be started. The next motion block can also be started by an appropriately configured digital input on the base unit.
12	In	Start_Jog v= x	Starts the "Jog Mode" with a defined speed. “x” is the speed saved in the servo amplifier for the function "Jog Mode". A rising edge starts the motion, a falling edge cancels the motion.

Connector X11B			
1	In	MT_Restart	Continues the motion task that was previously interrupted.
2	In	Start_MT I/O	Starts the motion task that is addressed by A0-A7 (connector X11A/1 to X11A8). If no motion task is addressed, then a homing task is started.
3	Out	InPos	When the target position for a motion task has been reached (the InPosition window), this is signaled by the output of a HIGH signal. **A cable break will not be detected.**
4	Out	Next-InPos	The start of each motion task in an automatically executed sequence of motion tasks is signaled by an inversion of the output signal. The output produces a LOW signal at the start of the first motion task of the sequence. The form of the message can be varied by using ASCII commands.
		PosReg 0	Can only be adjusted by ASCII commands or setup software.
5	Out	$\overline{\text{F_error}}$	A LOW signal indicates that the position has gone outside the acceptable following error window.
6	Out	PosReg1	default: SW limit 1, indicated by a HIGH signal
7	Out	PosReg2	default: SW limit 2, indicated by a HIGH signal
8	Out	PosReg3	Can only be adjusted by ASCII commands or setup software.
9	Out	PosReg4	Can only be adjusted by ASCII commands or setup software.
10	Out	PosReg5	Can only be adjusted by ASCII commands or setup software.
11	-	24V DC	Supply voltage for output signals.
12	-	I/O-GND	Digital GND for the control system.

9.1.2.5 Connection diagram (default)

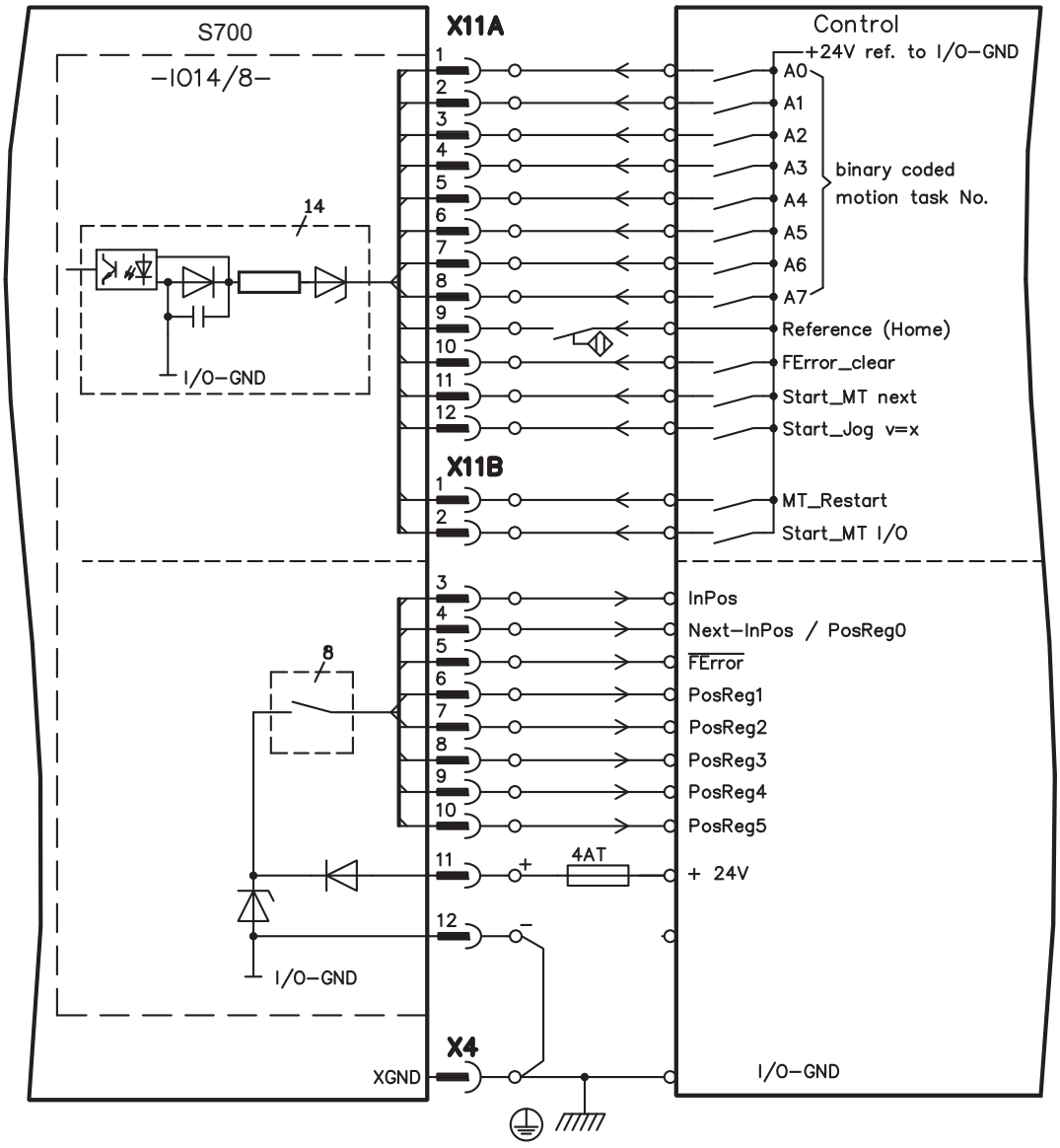

9.1.3 Expansion card -PROFIBUS-

This section describes the PROFIBUS expansion card for the S700.
Information on the range of functions and the software protocol can be found in our manual “Communication Profile PROFIBUS DP”.
The PROFIBUS expansion card has two 9-pin SubD sockets wired in parallel.
The supply voltage for the expansion card is provided by the servo amplifier.

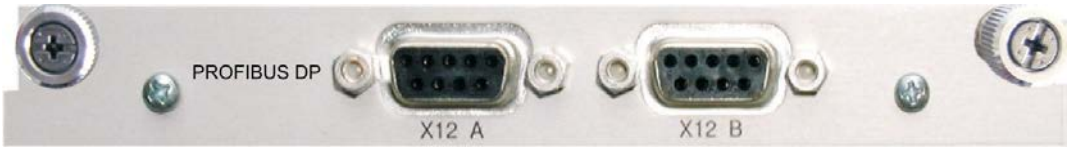

9.1.3.1 Connection technology

Cable selection, cable routing, shielding, bus connector, bus termination and transmission times are all described in the “Installation Guidelines for PROFIBUS-DP/FMS” from PNO, the PROFIBUS User Organization.

9.1.3.2 Connection diagram

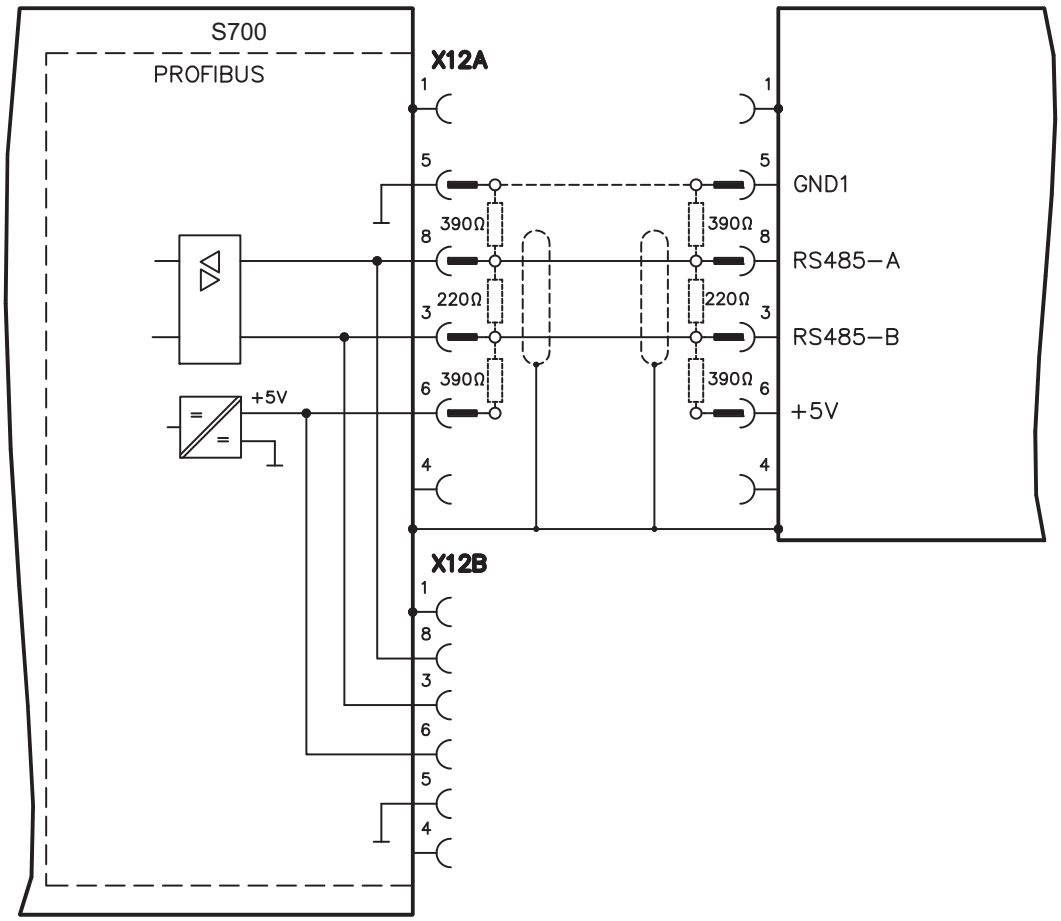

9.1.4 Expansion card -SERCOS-

This section describes the sercos® II expansion card for S700. Information on the range of functions and the software protocol can be found in our manual “IDN Reference Guide sercos® ”.

9.1.4.1 LEDs

RT	Indicates whether sercos® telegrams are being correctly received. In the final Communication Phase 4 this LED should flicker, since cyclical telegrams are being received.
TT	Indicates that sercos® telegrams are being transmitted. In the final Communication Phase 4 this LED should flicker, since cyclical telegrams are being transmitted. Check the station addresses for the controls and the servo amplifier if: - the LED never lights up in sercos® Phase 1 or - the axis cannot be operated, although the RT LED is lighting up cyclically.
ERR	Indicates that sercos® communication is faulty or suffering from interference. If this LED is very bright, then communication is suffering strong interference, or is non-existent. Check the sercos® transmission speed for the controls and the servo amplifier (BAUD RATE) and the fiber-optic connection. If this LED fades or flickers, this indicates a low level of interference for sercos® communication, or the optical transmitting power is not correctly matched to the length of cable. Check the transmitting power of the (physically) previous sercos® station. The transmitting power of the servo amplifier can be adjusted in the setup software DRIVEGUI.EXE on the sercos® screen page, by altering the length parameter for the cable length.

9.1.4.2 Connection technology

For the fiber optic cable connection, only use sercos® components to the sercos® Standard IEC 61491.

Receive data
The fiber optic cable carrying receive data for the drive in the ring structure is connected to X13 with an F-SMA connector.

Transmit data
Connect the fiber optic cable for the data output to X14 by F-SMA connector.

9.1.4.3 Connection diagram

Layout of the sercos® bus system in ring topology, with fiber optical cables (schematic).

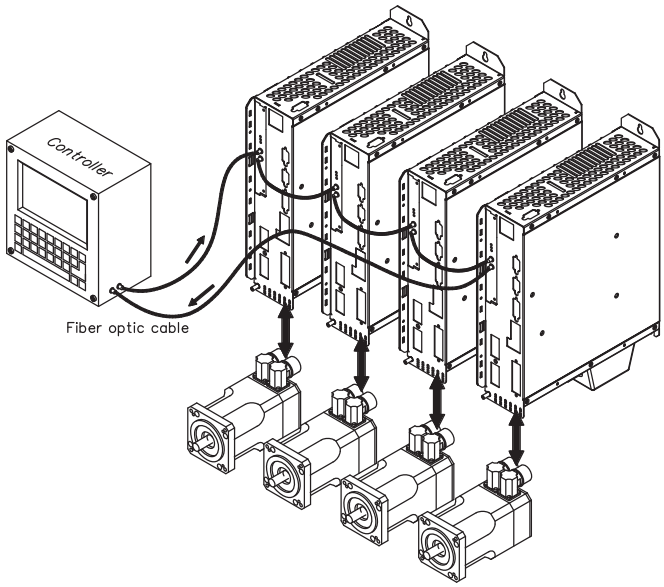

9.1.4.4 Setup

Modifying the station address

The drive address can be set to a value between 0 and 63. With address 0, the drive is assigned as an amplifier in the sercos® ring. Set the station address with the:

Keys on the front of the servo amplifier
The sercos® address can be modified using the keys on the front of the amplifier (p. 120).

Setup software
The address can also be modified in the setup software, “CAN/Fieldbus” screen (please refer to the setup software online help). Alternatively, enter the command **ADDR #** in the “Terminal” screen, where # is the new address of the drive.

Modifying the baud rate and optical power

If the baud rate is not set correctly, communication is not possible.
The **SBAUD #** parameter can be used to set the baud rate, where # is the baud rate. If the optical power is not set correctly, errors occur in telegram transmission and the red LED on the drive lights up. During normal communication, the green send and receive LEDs flash, giving the impression that the relevant LED is on.
The **SLEN #** parameter can be used to specify the optical range for a standard 1 mm² glass fibre cable, where # is the length of the cable in meters.

SBAUD		SLEN	
2	2 Mbaud	0	Very short connection
4	4 Mbaud	1…< 15	Length of the connection with a 1 mm² plastic cable
8	8 Mbaud	15…< 30	Length of the connection with a 1 mm² plastic cable
16	16 Mbaud	≥ 30	Length of the connection with a 1 mm² plastic cable

Setup software
The parameters can be modified in the setup software, “SERCOS” screen (please refer to the setup software the online help). Alternatively, the commands **SBAUD #** and **SLEN #** can be entered in the “Terminal” screen.

9.1.5 Expansion card - DEVICENET -

This section describes the DeviceNet expansion card for S700.
Information on the range of functions and the software protocol can be found in our manual “DeviceNet Communication Profile”.

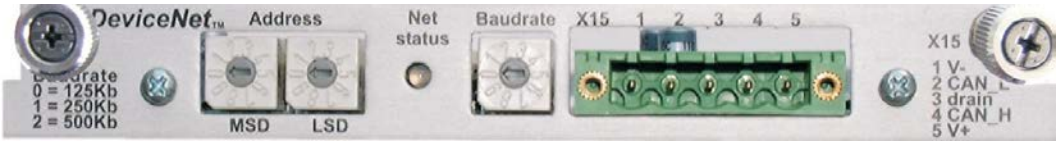

9.1.5.1 Connection technology, Connection diagram

Cable selection, cable routing, shielding, bus connector, bus termination and transmission times are all described in the “DeviceNet Specification, Volume I, II”, published by ODVA.

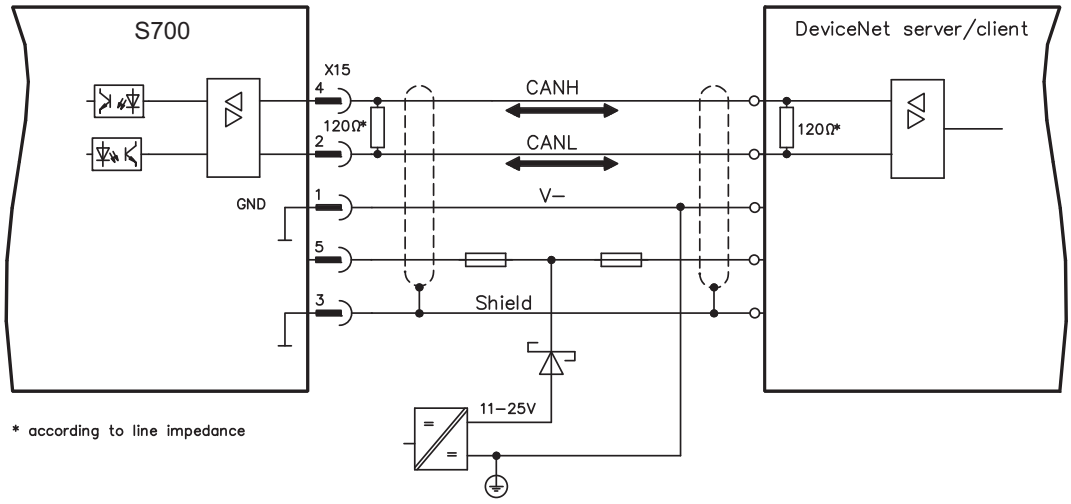

9.1.5.2 Combined module status and network status LED

LED	Meaning
off	The device is not online. - The device has not yet finished the Dup_MAC_ID test. - The device is possibly not yet switched on.
green	The device is operating as normal, is online, and the connections have been established. The device has been assigned to a master.
blinking green	The device is operating as normal, is online, but the connections have not been established. - The device has passed the Dup_MAC_ID test and is online, but the connection to other nodes have not been established. - This device has not been assigned to a master. - Missing, incomplete or wrong configuration.
blinking red	An error that can be cleared and/or at least one I/O connection are in a waiting state.
red	- An error has occurred that cannot can be cleared; it may be necessary to replace the device. - Communication device failure. The device has detected a fault that prevents communication with the network (for instance, a MAC ID appears twice or BUSOFF).

9.1.5.3 Setup

Setting the station address (device address)

The station address for the servo amplifier can be set in three different ways:

- Set the rotary switches at the front of the expansion card to a value between 0 and 63. Each switch represents a decimal figure. For example, to set the address for the drive to 10, set MSD to 1 and LSD to 0.
- Set the rotary switches at the front of the expansion card to a value higher than 63. Now you can set up the station address by using the ASCII commands DNMACID x, SAVE, COLDSTART, whereby “x” stands for the station address.
- Set the rotary switches at the front of the expansion card to a value higher than 63. Now you can set up the station address by using the DeviceNet Object (Class 0x03, Attribute 1). This is normally carried out with the help of a DeviceNet software setup tool. You must save the parameters in non-volatile memory (Class 0x25, Attribute 0x65) and then restart the drive after setting or altering the address.

Setting the transmission speed

The DeviceNet transmission speed can be set in three different ways:

- Set the rotary switch for Baud rate (at the front of the option card) to a value between 0 and 2. 0 = 125 kbit/s, 1 = 250 kbit/s, 2 = 500 kbit/s.
- Set the rotary switch for Baud rate (at the front of the option card) to a value higher than 2. Now you can set the Baud rate by using the terminal commands DNBAUD x, SAVE, COLDSTART, whereby “x” stands for 125, 250 or 500 .
- Set the rotary switch for Baud rate (at the front of the option card) to a value higher than 2. Now you can set the Baud rate by using the DeviceNet Object (Class 0x03, Attribute 2) to a value between 0 and 2. This is normally carried out with the help of a DeviceNet software setup tool. You must save the parameters in non-volatile memory (Class 0x25, Attribute 0x65) and then restart the drive after altering the baud rate.

9.1.5.4 Bus cable

To meet ISO 11898, a bus cable with a characteristic impedance of 120 Ω should be used. The maximum usable cable length for reliable communication decreases with increasing transmission speed. As a guide, you can use the following values which we have measured, but they are not to be taken as assured limits.

General characteristic	Specification
Bit rates	125 kbit, 250 kbit, 500 kbit
Distance with larger bus connections	500 meters at 125 kBaud 250 meters at 250 kBaud 100 meters at 500 kBaud
Number of nodes	64
Signal environment	CAN
Modulation	Basic bandwidth
Coupling medium	DC-coupled differential transmit/receive operation
Isolation	500 V (option: optocoupler on the transceiver's node side)
Typical differential input impedance (recessive state)	Shunt C = 5pF Shunt R = 25KΩ (power on)
Min. differential input impedance (recessive state)	Shunt C = 24pF + 36 pF/m of the permanently attached stub cable Shunt R = 20KΩ
Absolute max. voltage range	-25 V to +18 V (CAN_H, CAN_L) The voltages for CAN_H and CAN_L refer to the ground pin of the transceiver. The voltage is higher than that on the V-terminal by the amount of the forward voltage drop of the Schottky diode. This voltage drop must be < 0.6V.

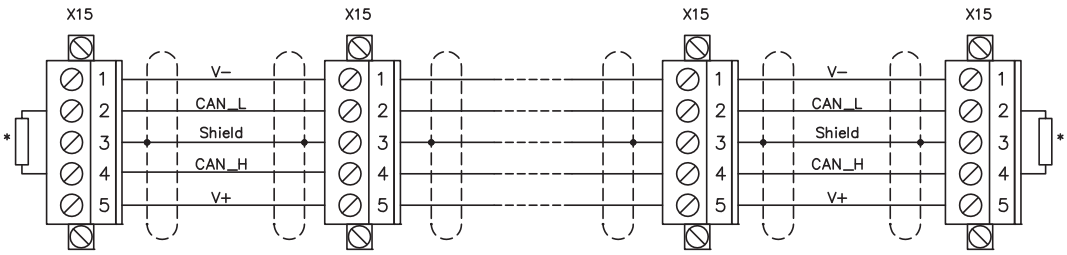

Grounding:
The DeviceNet network must only be grounded at one point, to avoid ground loops. The circuitry for the physical layer in all devices are referenced to the V-bus signal. The ground connection is made via the power supply for the bus system. The current flowing between V- and ground must not flow through any device other than the power supply.

Bus topology:
The DeviceNet medium utilizes a linear bus topology. Termination resistors are required at each end of the connecting cable. Stub cables are permitted up to a length of 6 meters, so that at least one node can be connected.

Termination resistors:
DeviceNet requires a termination **at each end** of the connecting cable.
These resistors must meet the following requirements: 120Ω, 1% metal-film, ¼ W

9.1.6 Expansion card -SYNQNET-

This section describes the SynqNet expansion card for S700. Information on the range of functions and the software protocol can be found in the SynqNet documentation.

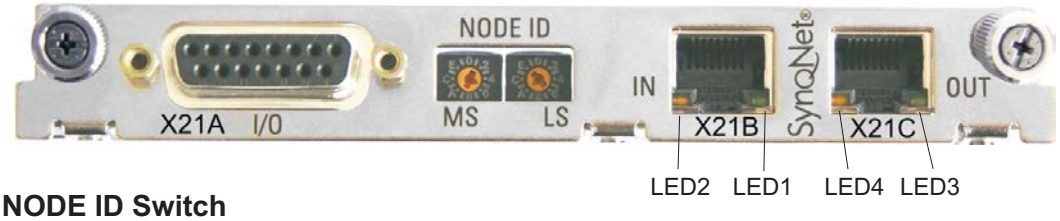

9.1.6.1 NODE ID Switch

With these hexadecimal switches you can set the main and low significant bytes of the Node ID separately. SynqNet does not require an address for correct operation in the network, however in some machines this can be a convenient way of identifying build options to the application program.

9.1.6.2 Node LED table

LED#	Name	Function
LED1, green	LINK_IN	ON = receive valid (IN port) OFF= not valid, power off, or reset.
LED2, yellow	CYCLIC	ON = network cyclic BLINK = network not cyclic OFF = power off, or reset
LED3, green	LINK_OUT	ON = receive valid (OUT port) OFF = not valid, power off, or reset
LED4, yellow	REPEATER	ON = repeater on, network cyclic BLINK = repeater on, network not cyclic OFF = repeater off, power off, or reset

9.1.6.3 SynqNet Connection, Connector X21B/X21C (RJ-45)

Connection to the SynqNet network via RJ-45 connectors (IN and OUT ports) with integrated LEDs.

9.1.6.4 Digital inputs and outputs, connector X21A (SubD 15-pin, socket)

Inputs (In): 24V (20...28V), opto-isolated, one high-speed input (Pin 4)
Outputs (Out): 24V, opto-isolated, Darlington driver

Pinout connector X21A (SubD 15 pin)							
Pin	**Type**	**Description**		**Pin**	**Type**	**Description**	
1	In	+24V	power supply	**9**	In	GND	power supply
2	Out	NODE-ALARM	indicates a problem with the node	**10**	Out	OUT_00	digital output
3	Out	OUT_01	digital output	**11**	Out	OUT_02	digital output
4	In	IN_00	capture input (fast)	**12**	In	IN_02	digital input
5	In	IN_04	digital input	**13**	In	IN_03	digital input
6	In	IN_01	digital input	**14**	In	NEGLIM	limit switch, negative direction
7	In	HOME	reference switch	**15**	In	NODE-DISABLE	disables Node
8	In	POSLIM	limit switch, positive direction				

9.1.6.5 Connection diagram digital inputs and outputs, connector X21A

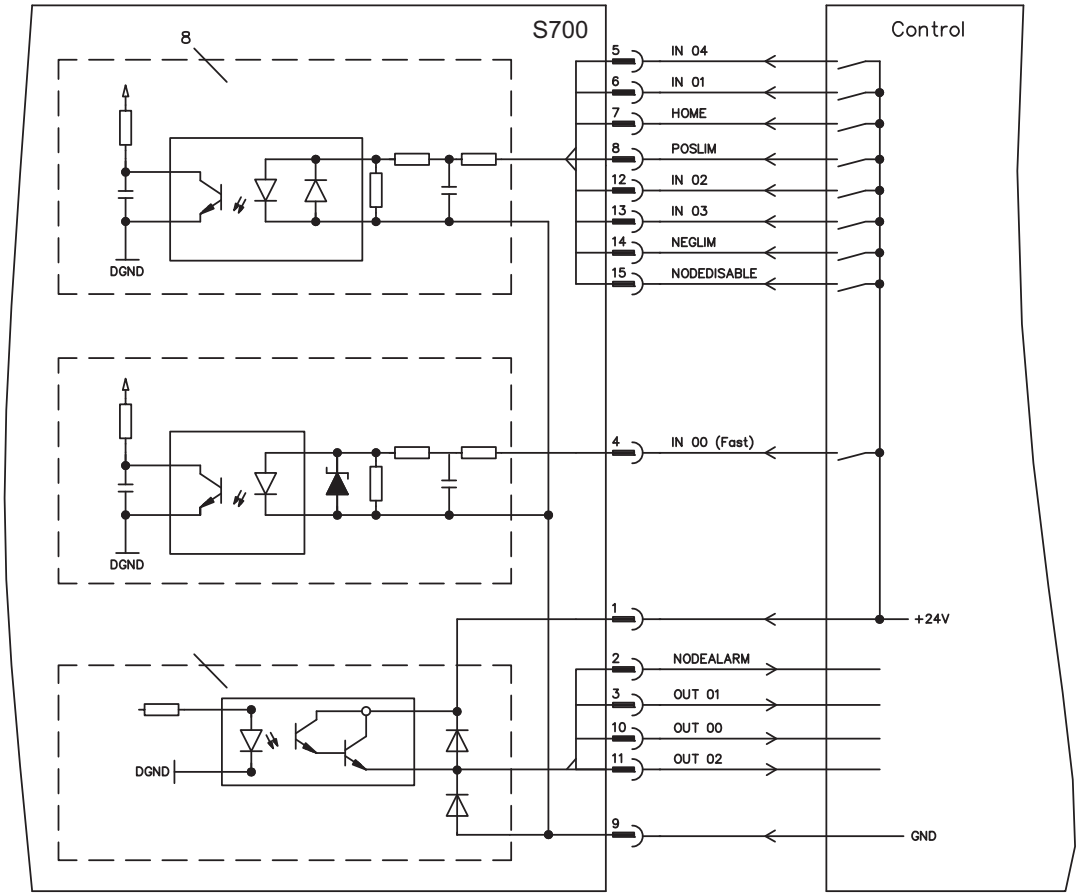

9.1.7 Expansion card - FB-2to1 -

This chapter describes the Feedback extension card FB-2to1 for the S700. The card enables simultaneous connection of a digital primary and of an analog secondary feedback to the connector X1. The supply of 24V DC auxiliary voltage to X33 is converted on the extension card into a precise 5V DC encoder supply for the secondary feedback.

9.1.7.1 Pinout

X33	Pinout Combicon Connector
+	+24V DC (20...30V), approx. 500mA
-	GND

X32	Pinout SubD 9 poles (secondary Feedback)	X1B	Pinout SubD 15 poles (primary Feedback)
	SinCos (1V p-p)		EnDat 2.2, BiSS digital, SSI absolute
1	B- (Cosine)	1	n.c.
2	SENSE+	2	0V
3	A- (Sine)	3	n.c.
4	n.c.	4	+5V DC
5	+5V DC (300mA)	5	DATA
6	B+ (Cosine)	6	n.c.
7	SENSE-	7	Temperatur Sensor Motor
8	A+ (Sine)	8	CLOCK
9	0V	9	n.c.
-	-	10	Sense 0V
-	-	11	n.c.
-	-	12	Sense +5V
-	-	13	$\overline{\text{DATA}}$
-	-	14	Temperatur Sensor Motor
-	-	15	$\overline{\text{CLOCK}}$

9.1.7.2 Wiring example with BiSS digital (primary) and SinCos (secondary)

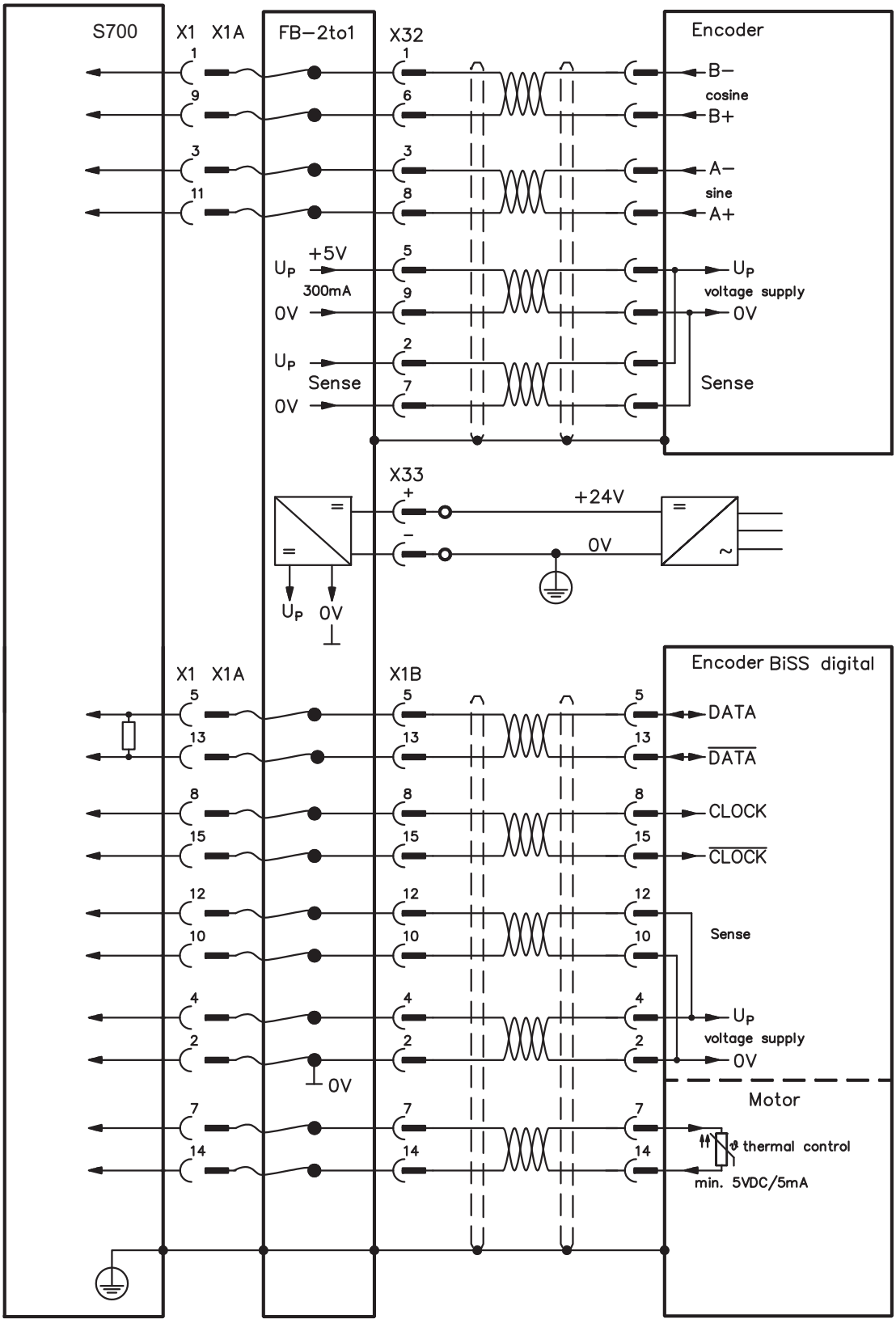

9.1.8 Expansion module -2CAN-

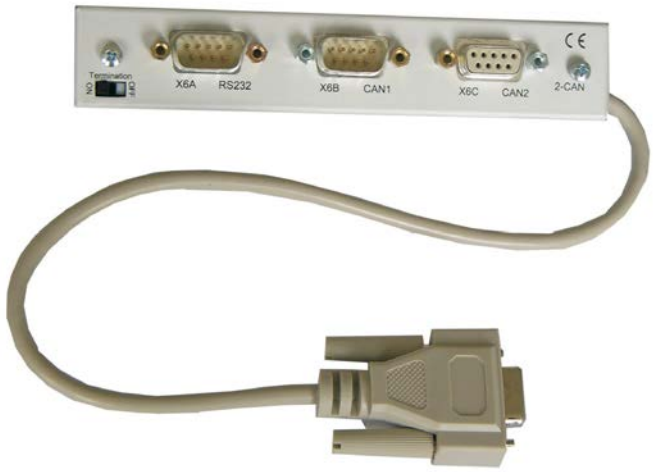

Connector X6 of the S700 is assigned to the signals for the RS232 interface and the CAN interface. It is therefore not the standard pin assignment for these interfaces, and a special cable is required to be able to use both interfaces simultaneously.
The -2CAN- expansion module provides the interfaces on separate Sub-D connectors. The two CAN connectors are wired in parallel. A termination resistor (120 Ω) for the CAN bus can be switched into circuit if the S700 is at the end of the bus.

9.1.8.1 Installation

The modul must be placed onto the option slot after levering off the cover of the option slot 1 (see p. 125):

NOTE

- Screw the distance pieces into the fixing lugs of the option slot.
- Place the expansion module onto the option slot.
- Screw the screws into the threads of the distance pieces.
- Plug the Sub-D9 socket into connector X6 on the S700

9.1.8.2 Connection technology

Standard shielded cables can be used for the RS232 and CAN interfaces.

NOTE

If the servo amplifier is the last device on the CAN bus, then the switch for the bus termination must be set to ON.
Otherwise, the switch must be set to OFF (condition as delivered).

9.1.8.3 Connector assignments

RS232		CAN1=CAN2	
X6A Pin	Signal	X6B=X6C Pin	Signal
1	Vcc	1	
2	RxD	2	CAN-Low
3	TxD	3	CAN-GND
4		4	
5	GND	5	
6		6	
7		7	CAN-High
8		8	
9		9	

9.1.8.4 Setup of Station Address and Baud Rate

During setup it makes sense to use the keypad on the front panel to preset the station addresses for the individual amplifiers and the Baud rate for communication.

NOTE

After changing the station address and baud rate you must turn the 24V auxiliary supply for the servo amplifier off and on again.

Possible ways for setup:

- keypad on the front panel of the servo amplifier
- setup software: screen page “CAN / Fieldbus”
- serial interface with a sequence of ASCII commands:
  ADDR nn ⇒ SAVE ⇒ COLDSTART (with nn = address)
  CBAUD bb ⇒ SAVE ⇒ COLDSTART (with bb = baud rate in kBaud)

Coding of the Baud rate in LED display:

Coding	Baud rate in kBit/s	Coding	Baud rate in kBit/s
1	10	25	250
2	20	33	333
5	50	50	500
10	100	66	666
12	125	80	800
		100	1000

9.2 Expansion cards for slot 2

9.2.1 Guide to installation of expansion cards in slot 2

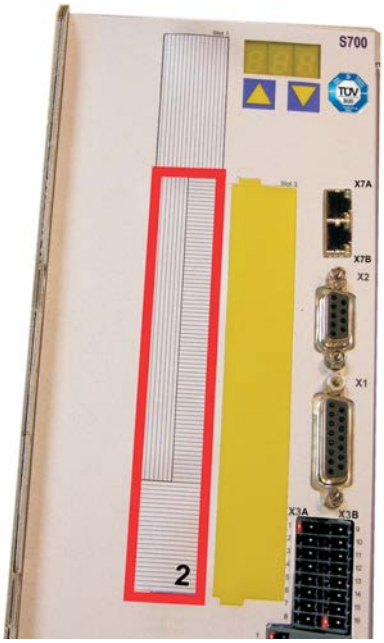

Boundary of SLOT 2

The method of installing the expansion card in slot 2 is the same as that described for slot 1 (see p.125).

- Remove the **lower** crosshatched area of the front film (labeled slot 2).
- Lever out the cover plates under the film.
- Push the expansion card into the slot.
- Use the screws provided to fasten the front plate of the expansion card in place.

9.2.2 Option "F2", controlled Fan

To reduce noise emission the servo amplifiers can be ordered with the built-in option card F2. This option cannot be built-in later. The F2 option card fits to slot2 or 3 (see part number scheme on p.24).

NOTE Option card F2 can be used combined with a card in slot 1 even if it is plugged to slot 2!

Function

The fan is switched on and off or runs with 50% rated speed depending on temperature and brake power. That reduces the average noise emission.

Switching temperature

Monitoring	Fan off	Fan ~50%	Fan on
Internal temperature	< 55°C	~ 58°C	> 65°C
Heat sink temperature	< 60°C	~ 65°C	> 75°C
Brake resistor (internal)	< 20W	~ 30W	> 45W

9.2.3 Expansion cards "PosI/O" & "PosI/O-Monitor"

The **“PosI/O”** and **"PosI/O-Monitor"** expansion card can be pushed into slot2 or 3. The expansion cards cannot be combined and the use of only one slot in time is allowed.

PosI/O

This expansion card provides an extra SubD connector (X5) with high-speed, bidirectional, digital, 5 V inputs and outputs. The setup software can be used to preset various input and output functions, e.g.:

- Position encoder emulation (ROD- or SSI-compatible)
- Input for high-speed 5 V RS485 signals (electronic gearing, master-slave operation)

PosI/O-Monitor

This expansion card provides the features of the PosI/O card plus an extra connector X3C with analog +/-10V Inputs and Outputs (see page 150, chapter "Analog I/O"). Functionality can be set with the setup software or with macro functions.

9.2.3.1 Feedback

9.2.3.1.1 ROD (AquadB) 5V (X5, X1)

A 5V incremental encoder (AquadB) can be used as standard motor feedback (primary and secondary, ⇨ p.76).Every time the 24V auxiliary voltage is switched on, the amplifier need start-up information for the position controller (parameter value MPHASE). Depending on the feedback type either wake&shake is executed or the value for MPHASE is read out of the amplifier's EEPROM.

WARNING

With vertical load the load could fall during wake&shake, because the brake is not active and torque is not sufficient to hold the load.
Don't use wake&shake with vertical load (hanging load).

The power supply for the encoder and thermal control in the motor is connected to X1.
If lead lengths of more than 50m are planned please consult our customer service.
Frequency limit (A, B, N): 1.5 MHz

Type	FBTYPE	EXTPOS	GEARMODE	ENCMODE	Remarks
AquadB 5V	13	3	3	0	MPHASE from EEPROM
AquadB 5V	19	3	3	0	MPHASE wake & shake

Switch on supply voltage for the encoder at X1: set ENCVON to 1

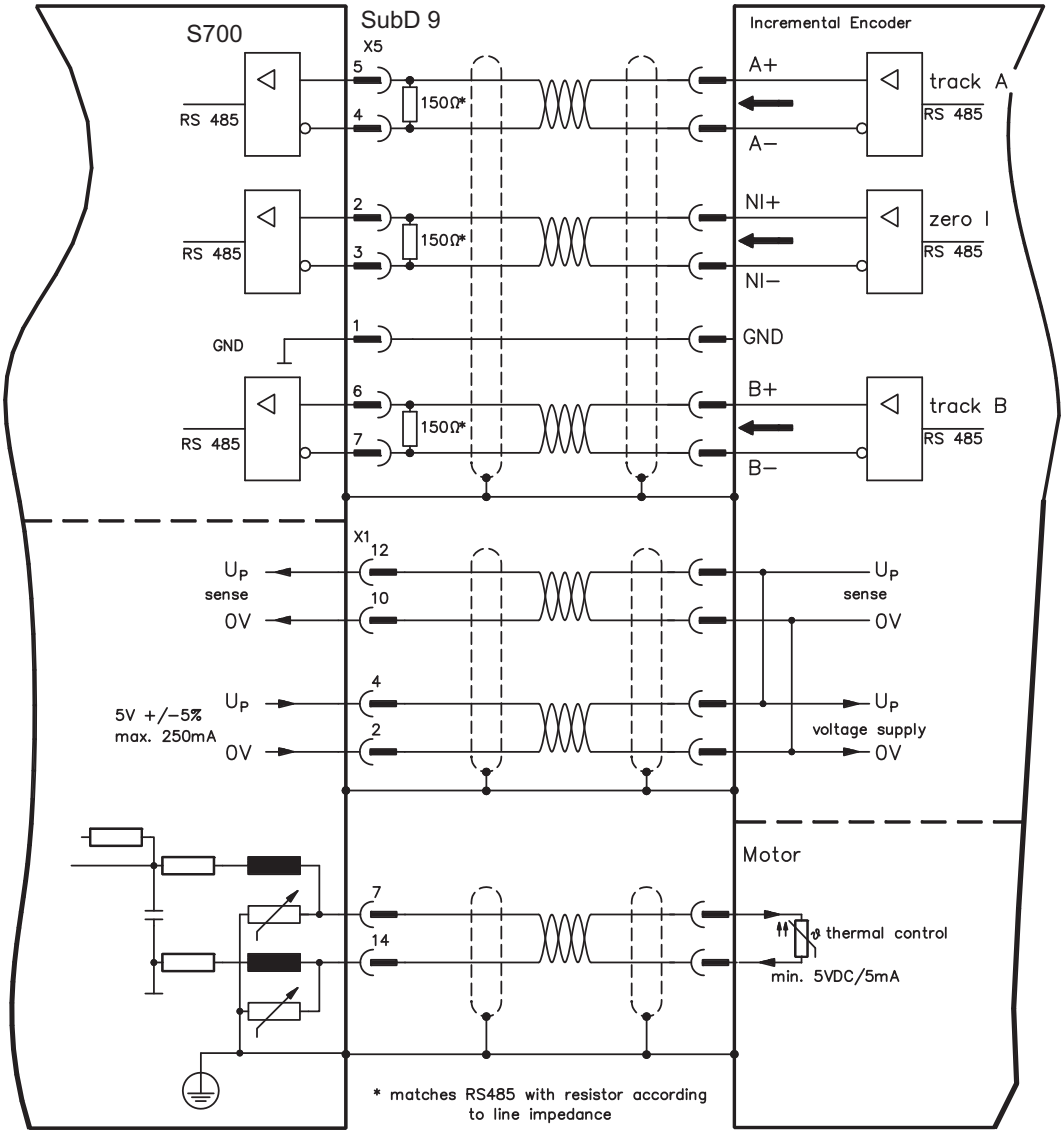

9.2.3.1.2 ROD (AquadB) 5V with Hall (X5, X1)

Wiring of a 5V incremental encoder (ROD, AquadB) with Hall sensors as a feedback unit (primary, ⇨ p.76). For the commutation hall sensors are used and for the resolution an incremental encoder.

The power supply for the encoder and thermal control in the motor is connected to X1 and evaluated there.

If cable lengths of more than 25m are planned, please consult our customer service. Frequency limit X5: 1.5 MHz, X1: 350 kHz

Type	FBTYPE	EXTPOS	GEARMODE	ENCMODE
AquadB 5V with Hall	18	-	-	0

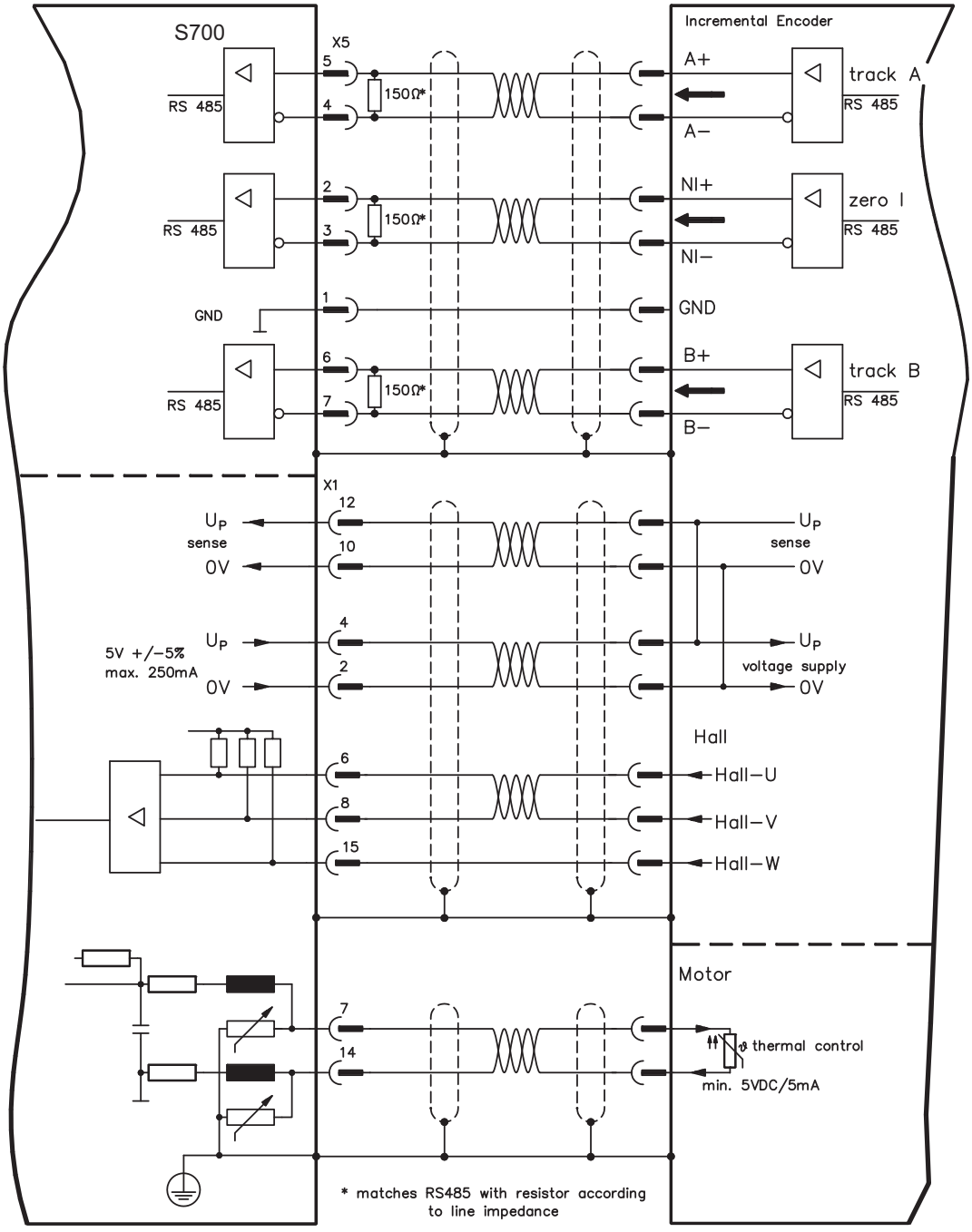

9.2.3.1.3 SSI Encoder (X5, X1)

Wiring of a synchronous serial absolute-encoder as a feedback system (primary or secondary, ⇨ p.76). The signal sequence can be read in **Gray** code or in **Binary** (standard) code.

The power supply for the encoder and thermal control in the motor is connected to X1 and evaluated there.

If cable lengths of more than 50m are planned, please consult our customer service.

Frequency limit: 1.5 MHz

Type	FBTYPE	EXTPOS	GEARMODE	ENCMODE
SSI	9	5	5	0

Switch on supply voltage for the encoder at X1: set ENCVON to 1

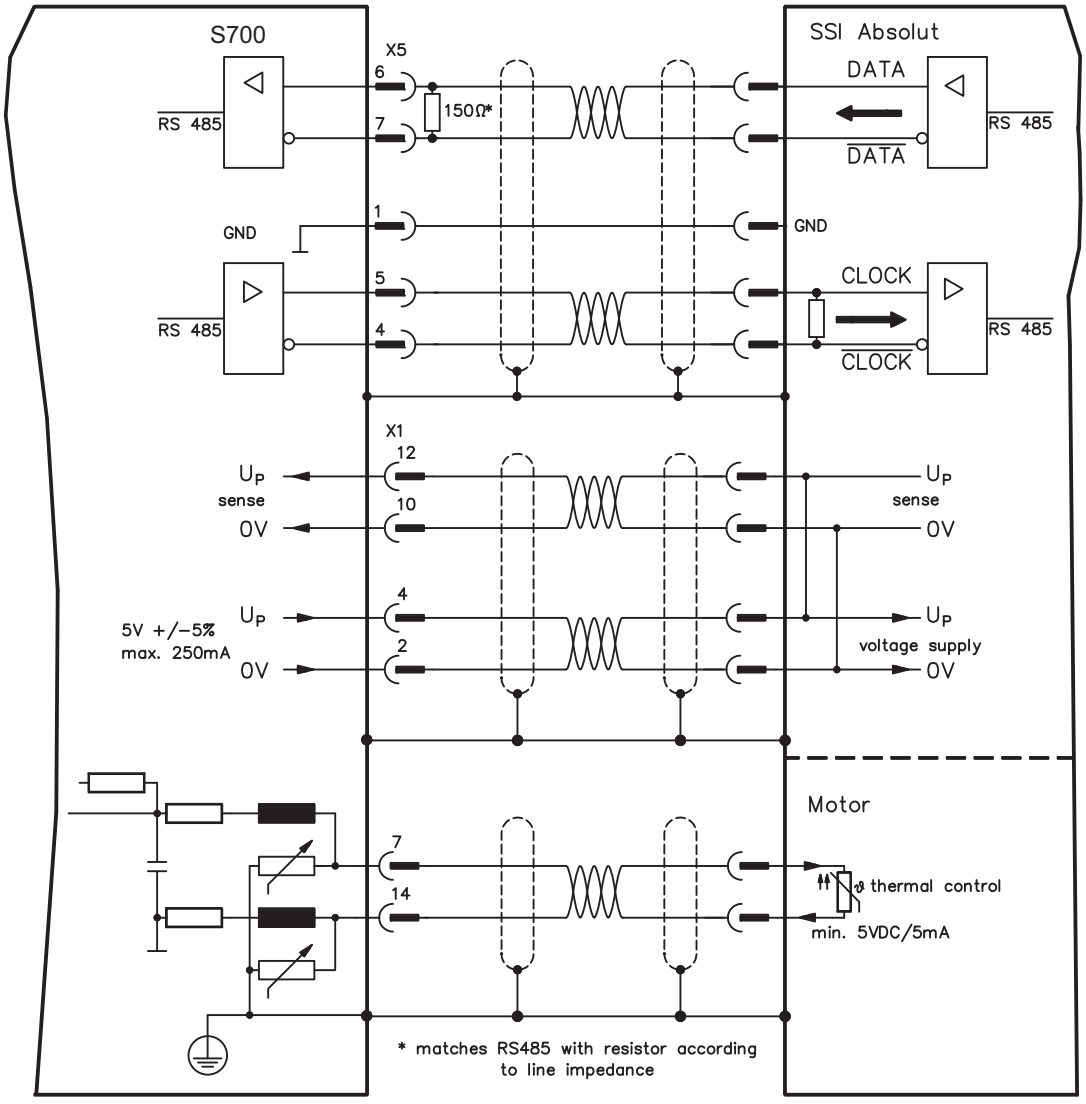

9.2.3.1.4 Sine Encoder with SSI (X5, X1)

Wiring of sine-cosine encoder with SSI interface as a linear feedback system (primary, ⇨ p.76).

The thermal control in the motor is connected via the encoder cable to X1 and evaluated there. All signals are connected using our pre-assembled encoder connection cable. If cable lengths of more than 50m are planned, please consult our customer service.

Frequency limit (sin, cos): 350 kHz

Type	FBTYPE	EXTPOS	GEARMODE	ENCMODE
SinCos SSI 5V linear	28	-	-	0

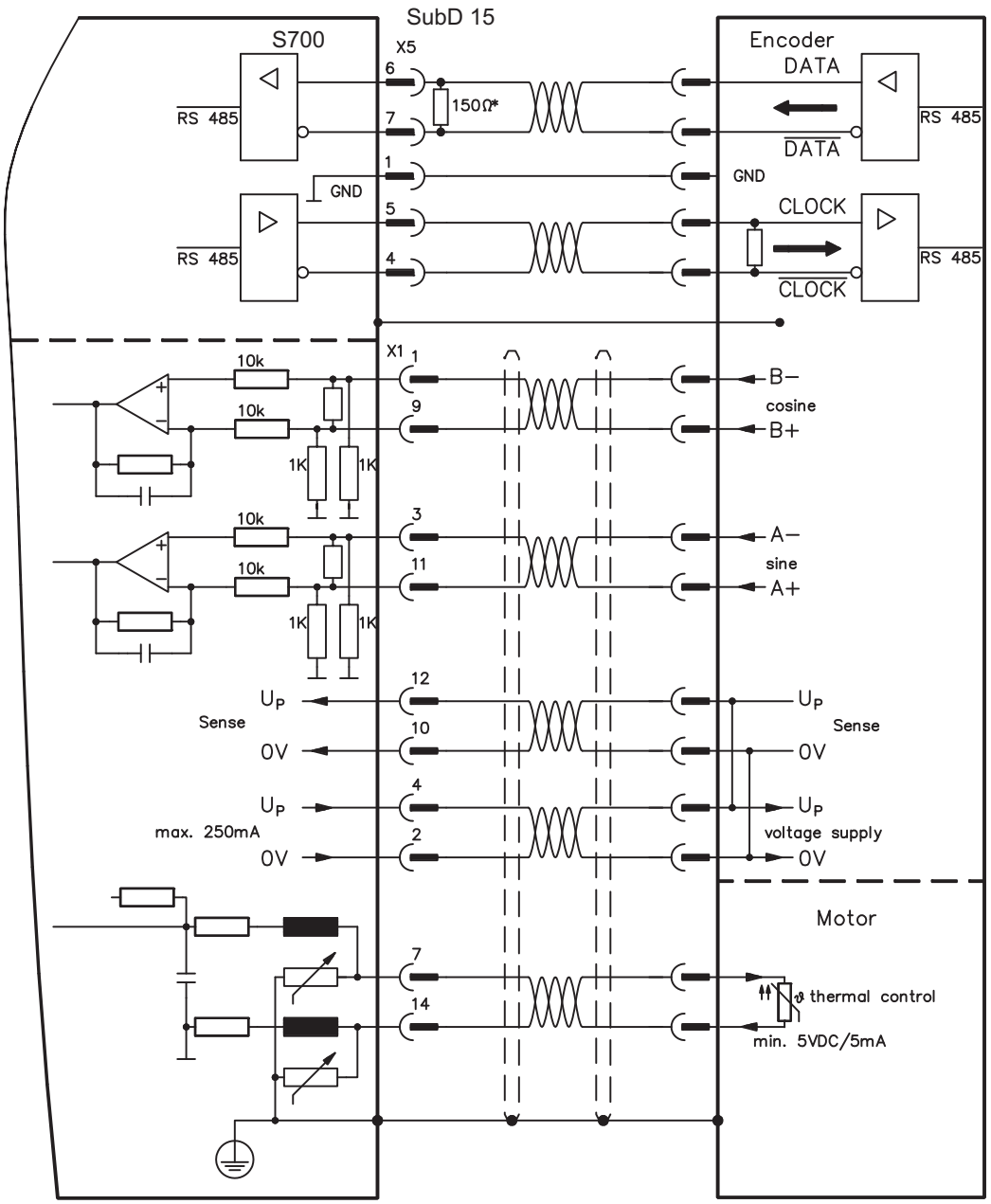

9.2.3.2 Electronic gearing, Master-Slave operation (X5)

9.2.3.2.1 Connection to a S700 master, 5V signal level (X5)

You can link several S700 amplifiers together in master-slave operation. Up to 16 slave amplifiers can be controlled by the master, via the encoder output. The SubD connector X5 is used for this purpose.
Master setup: position output to X5, screen page "Encoder emulation" (ENCMODE)
Slave setup: screen page "Electronic gearing" (GEARMODE)

Frequency limit: 1.5 MHz

Example for Master-Slave operation with two S700 amplifiers, ROD emulation is used:
Slave **GEARMODE: 3** Master **ENCMODE:1**

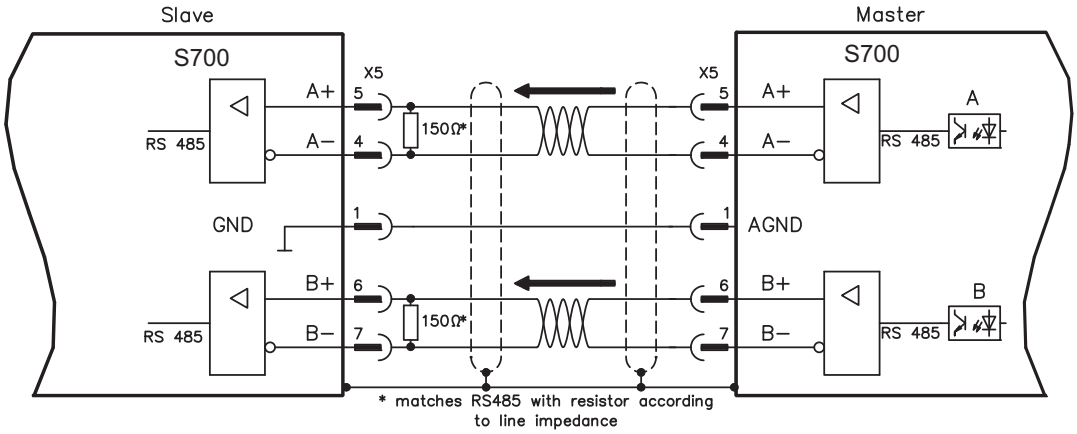

If SSI emulation is used, the master ENCMODE must be set to 2 and the slave GEAR-MODE to 5.

9.2.3.2.2 Connection to stepper motor controllers with 5 V signal level (X5)

Wiring of the servo amplifier (SubD connector X5) to a stepper-motor controller with a 5 V signal level.

Frequency limit: 1.5 MHz

Type	FBTYPE	EXTPOS	GEARMODE
Step/Direction 5V	-	-	4

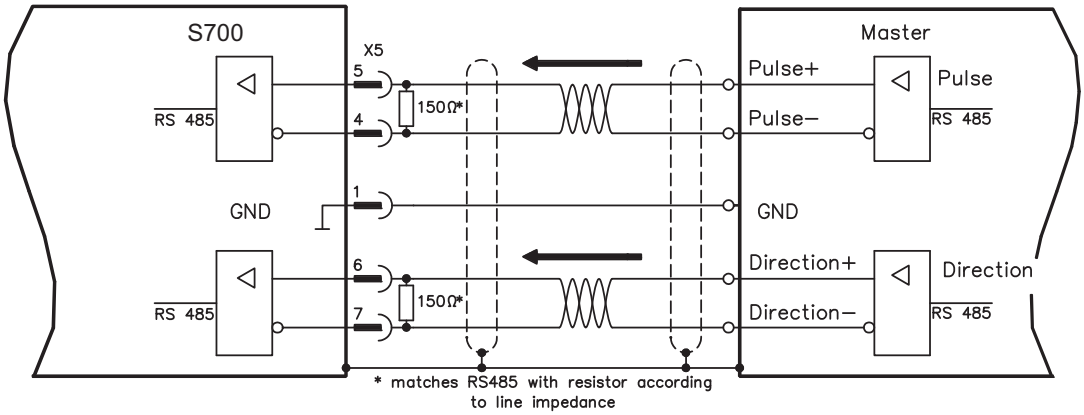

9.2.3.3 Encoder-Emulation (X5)

9.2.3.3.1 Incremental encoder output - A quad B (X5)

Fast incremental encoder interface. Select encoder function ROD (A Quad B) Encoder ("Encoder Emulation" screen page). The servo amplifier calculates the motor shaft position from the cyclic- absolute signals of the resolver or encoder, generating incremental-encoder compatible pulses from this information. Pulse outputs on the SubD connector X5 are 2 signals, A and B, with 90° phase difference (i.e. in quadrature, hence the alternative term "A quad B" output), with a zero pulse.
The resolution (before multiplication) can be set by the RESOLUTION function:

Encoder function (ENCMODE)	Feedback system (FBTYPE)	Resolution (lines) (ENCOUT)	Zero pulse (NI)
1, ROD	0, Resolver	32...4096	once per turn (only at A=B=1)
	>0, Encoder	256...524288 (2^8 … 2^{19})	
3, ROD interpolation	Encoder	2^4 … 2^7 (multiplication) TTL line x encoder resolution	encoder signal passed through from X1 to X5

With built in safety card only binary resolutions up to 2^{12} are possible. Use the NI-OFFSET parameter to adjust + save the zero pulse position within one mechanical turn. The drivers operate off an internal supply voltage.

NOTE

The maximum permissible cable length is 100 meters.
Connections and signals for the incremental encoder interface :
Default count direction: UP when the motor shaft is rotating clockwise (looking at the shaft's end)

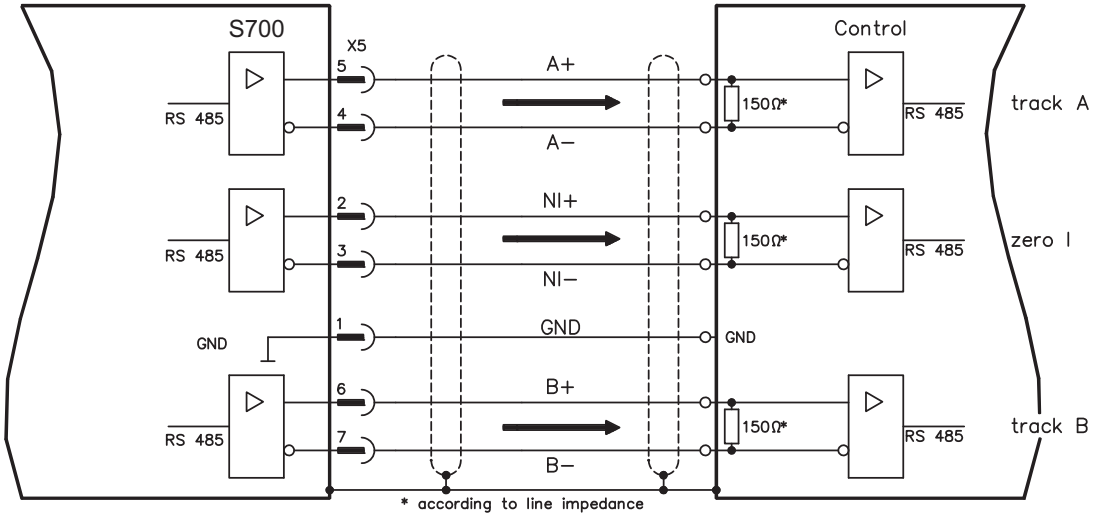

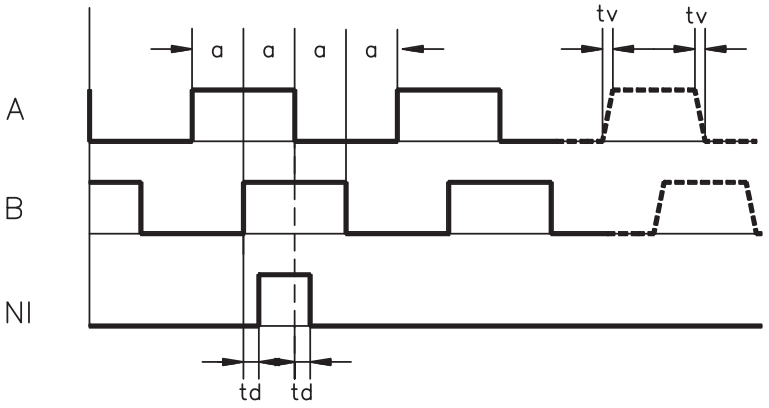

Edge spacing a ≥ 0.20 µs
Edge steepness tv ≤ 0.1 µs
Delay NI–td ≤ 0.1 µs
IΔUI ≥ 2V/20mA

9.2.3.3.2 SSI encoder output (X5)

SSI interface (synchronous serial absolute-encoder emulation). Select encoder function SSI (“Encoder Emulation” screen page, ENCMODE 2). The servo amplifier calculates the motor shaft position from the cyclic-absolute signals of the resolver or encoder. From this information a SSI date (Stegmann patent specification DE 3445617C2) is provided. Max 32 bits are transferred. The leading data bit contains the number of revolutions and are selectable from 12 to 16 bits. The following max. 16 bits contain the resolution and are not variable.

The following table shows the allocation of the SSI date depending upon selected number of revolutions:

	Revolution																Resolution (variable)															
	SSIREVOL																															
Bit	15	14	13	12	11	10	9	8	7	6	5	4	3	2	1	0	15	14	13	12	11	10	9	8	7	6	5	4	3	2	1	0
		14	13	12	11	10	9	8	7	6	5	4	3	2	1	0																
			13	12	11	10	9	8	7	6	5	4	3	2	1	0																
				12	11	10	9	8	7	6	5	4	3	2	1	0																
					11	10	9	8	7	6	5	4	3	2	1	0																

The signal sequence can be output in **Gray** code or in **Binary** (standard) code.
The servo amplifier can be adjusted to the clock frequency of your SSI-evaluation with the setup software.
The drivers operate off an internal supply voltage.

Connection and signals for the SSI interface :
Default count direction: UP when the motor shaft is rotating clockwise (looking at the end of the motor shaft)

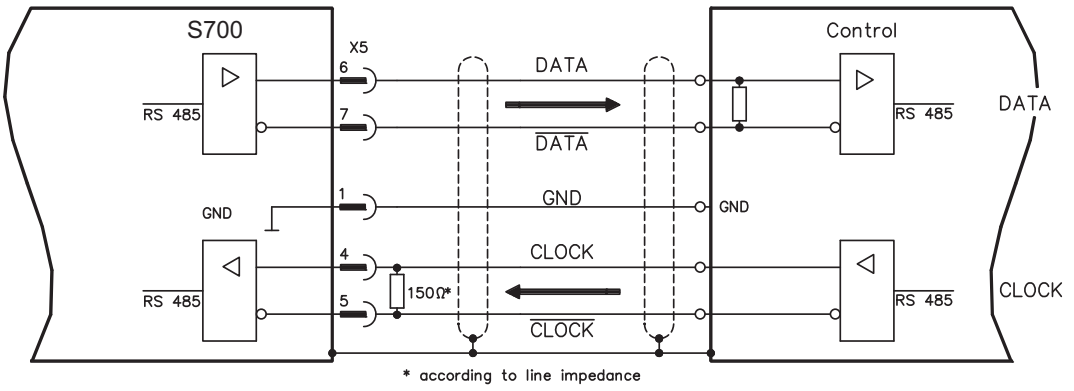

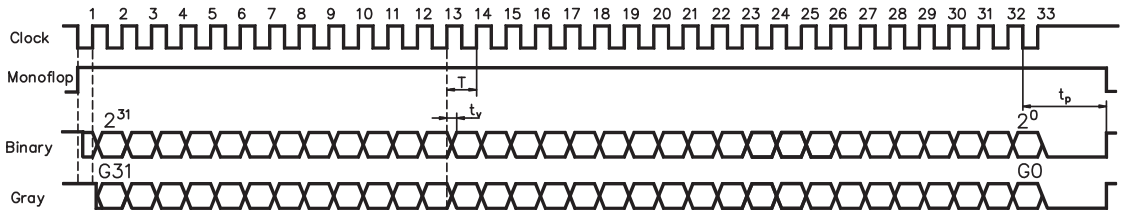

Switch over time Data t_v ≤ 300nsec
Period T = 600 ns
Time Out t_p = 3µs/13µs (SSITOUT)

Output IΔUI ≥ 2V/20mA
Input IΔUI ≥ 0.3V

9.2.3.4 Analog Inputs and Outputs

The expansion card "**PosI/O-Monitor**" adds analog inputs and outputs to the servo amplifier were pre-programmed signals can be assigned to. A listing of these pre-programmed functions can be found on the screen page "Analog I/O" of the setup software.

9.2.3.4.1 Analog Outputs ANALOG-OUT 1 and 2

You can use terminals X3C/17 (Analog-Out 1) respectively X3C/19 (Analog-Out 2) to deliver analog values converted from internal digital values (e.g. tachometer voltage).

Technical characteristics

- Reference ground is Analog-GND (AGND, terminal X3C/18 and X3C/20)
- Specification according to EN 61131-2 table 11
- Output voltage ±10 V
- Resolution: 0.38 mV, 16 Bit, Update rate 250 µs

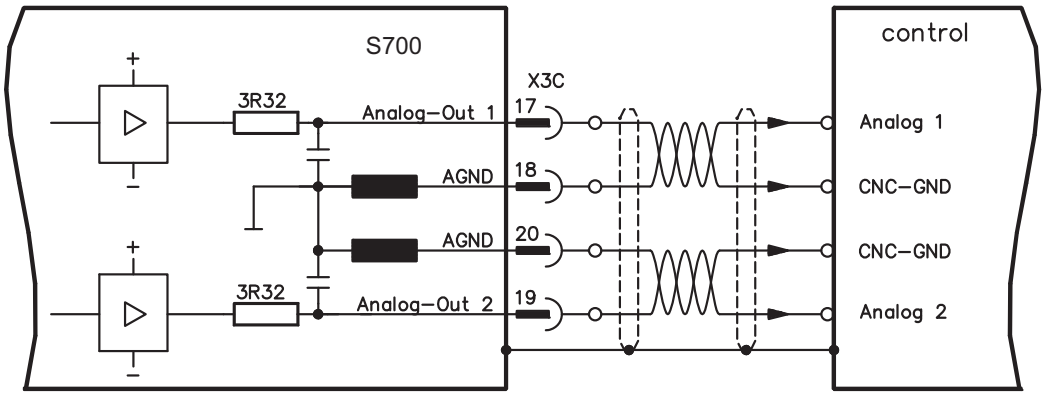

9.2.3.4.2 Analog Inputs ANALOG-IN 3 and 4

You can use terminals X3C/21-X3C/22 (Analog-In 3) respectively terminals X3C/24-X3C/25 (Analog-In 4) with several pre-programmed functions.

Technical characteristics

- Differential input voltage max. ± 10 V
- Resolution 1.25 mV, 16 bits, scalable
- Ground reference AGND, terminal X3C/23
- Input resistance 20 kΩ
- Common-mode voltage range for both inputs ± 10 V
- Update rate 62.5 µs

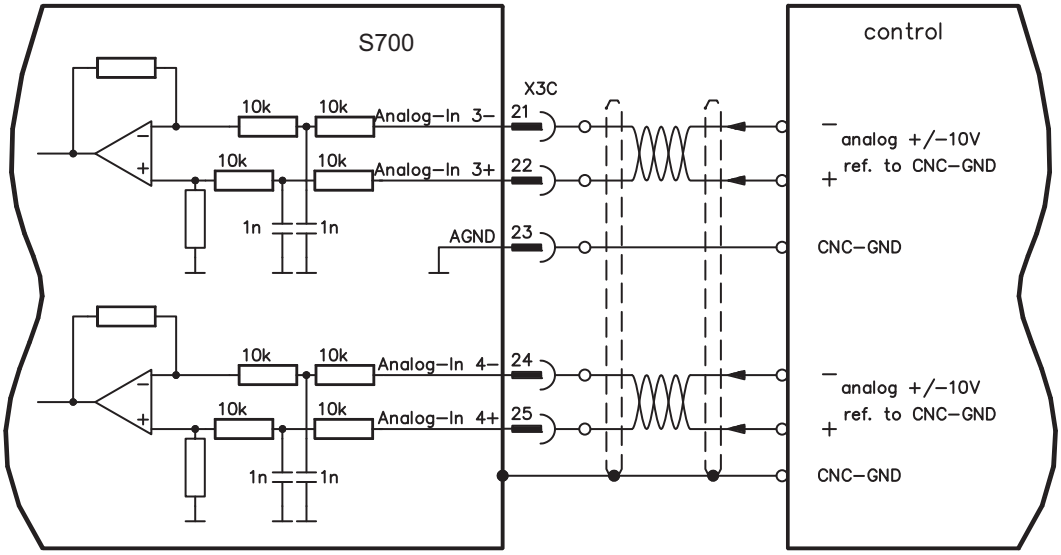

9.3 Expansion cards for slot 3

9.3.1 Guide to installation of expansion cards in slot 3

Boundary of SLOT3

The method of installing the expansion card in slot 3 is the same as that described for slot 1 (see p.125).

- Remove the area of the front film **colored yellow** (labeled slot 3).
- Lever out the cover plates under the film.
- Remove the small PCB (STO Bridge) which is plugged into slot. Use suitable pliers.
- Push the expansion card into the slot.
- Use the screws provided to fasten the front plate of the expansion card in place.

9.3.2 Option "F2", controlled Fan

To reduce noise emission the servo amplifiers can be ordered with the built-in option card F2. This option cannot be built-in later. The F2 option card fits to slot2 or 3 (see part number scheme on p.24).

Function

The fan is switched on and off or runs with 50% rated speed depending on temperature and brake power. That reduces the average noise emission.

Switching temperature

Monitoring	Fan off	Fan 50%	Fan on
Internal temperature	< 55°C	~ 58°C	> 65°C
Heat sink temperature	< 60°C	~ 65°C	> 75°C
Brake resistor (internal)	< 20W	~ 30W	> 45W

9.3.3 Expansion cards "PosI/O" & "PosI/O-Monitor"

The “PosI/O” and "PosI/O-Monitor" expansion cards can be pushed into slot 2 or 3. The expansion cards cannot be combined and the use of only one slot in time is allowed.
A detailed description of the interfaces can be found from page 142.

9.3.4 Expansion card "Safety 2-2" (S4)

This expansion card (Basic version) includes various safety functions for the safe operation of drive shafts. Rotatory synchronous motors are allowed when using this safety card. All functions fulfill the safety requirements **SIL CL2** according to IEC 62061 respectively performance level **PLd** according to ISO 13849-1.

9.3.4.1 Safe drive functions S2-2

The safety functions are activated using the digital inputs on the expansion card. The following functions are available:

Safe Torque Off (STO)
With the STO function, the power supply to the motor is interrupted safely directly in the drive. This corresponds to an uncontrolled braking in accordance with IEC 60204-1, category 0.

Safe Stop 1 (SS1)
With the SS1 function, the drive is stopped by controlled braking and then the power supply to the motor is interrupted safely. This corresponds to an uncontrolled braking in accordance with IEC 60204-1, category 1.

Safe Stop 2 (SS2)
With the SS2 function, the drive is stopped by controlled braking and then remains at a controlled standstill (SOS). This corresponds to a controlled braking in accordance with IEC 60204-1, category 2.

Safe Operating Stop (SOS)
The SOS function monitors the stop position reached and prevents any deviation outside a defined range.

Safely Limited Speed (SLS)
The SLS function monitors the drive to ensure that it maintains a defined speed.

Safe Limited Increments (SLI)
The SLI function monitors that the drive maintains a relative position.

Safe Speed Range (SSR)
The SSR function checks the current speed of the drive against maximum and minimum limiting values.

Safe Direction (SDI)
The SDI function ensures that the drive can only move in one (defined) direction.

9.3.4.2 Safety Notes S2-2

Comply with the operating instructions for the safety card. You can find the operating instructions on the CD-ROM provided with the product or on the Kollmorgen website.

9.3.4.3 Wiring supply voltage 24 V for digital outputs

NOTICE Input X4A/3 "STO2-Enable" must be connected to +24V DC and must not be used as additional STO input! Input STO1-Enable [X4B/6] must not be connected.

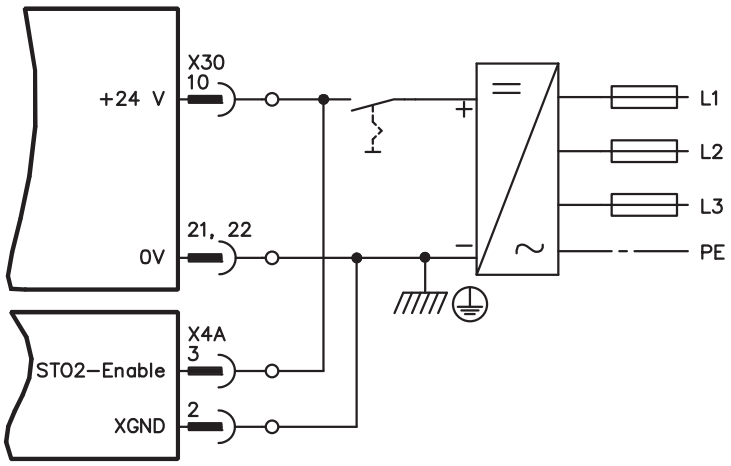

9.3.4.4 Safe inputs and outputs S2-2

NOTICE Inputs X30/1 SS1_Activate and X30/20 Reset must always be connected. Only tested outputs from a safety control system may be connected to all inputs on X30.

X30	Pin	E/A	Description
SS1 Activate	1	I	Activates function SS1
I0	2	I	Programmable, activate safety function X
I1	3	I	Programmable, activate safety function X
I2	4	I	Programmable, activate safety function X
STO Acknowledge	5	O	Status: STO activated
O0	6	O	Programmable, status: safety function X activated
O1	7	O	Programmable, status: safety function X activated
O2	8	O	Programmable, status: safety function X activated
O3	9	O	Programmable, status: safety function X activated
24V Supply	10	-	24V supply of digital outputs
n.c.	11	-	n.c.
I3	12	I	Programmable, activate safety function X
I4	13	I	Programmable, activate safety function X
I5	14	I	Programmable, activate safety function X
I6	15	I	Programmable, activate safety function X
Ready	16	O	Message "Safety card is ready to operate"
n.c.	17	O	n.c.
n.c.	18	O	n.c.
n.c.	19	O	n.c.
Reset	20	I	Input for Reset
0V Supply	21	-	0V supply of digital outputs
0V Supply	22	-	0V supply of digital outputs

9.3.4.5 Wiring inputs S2-2

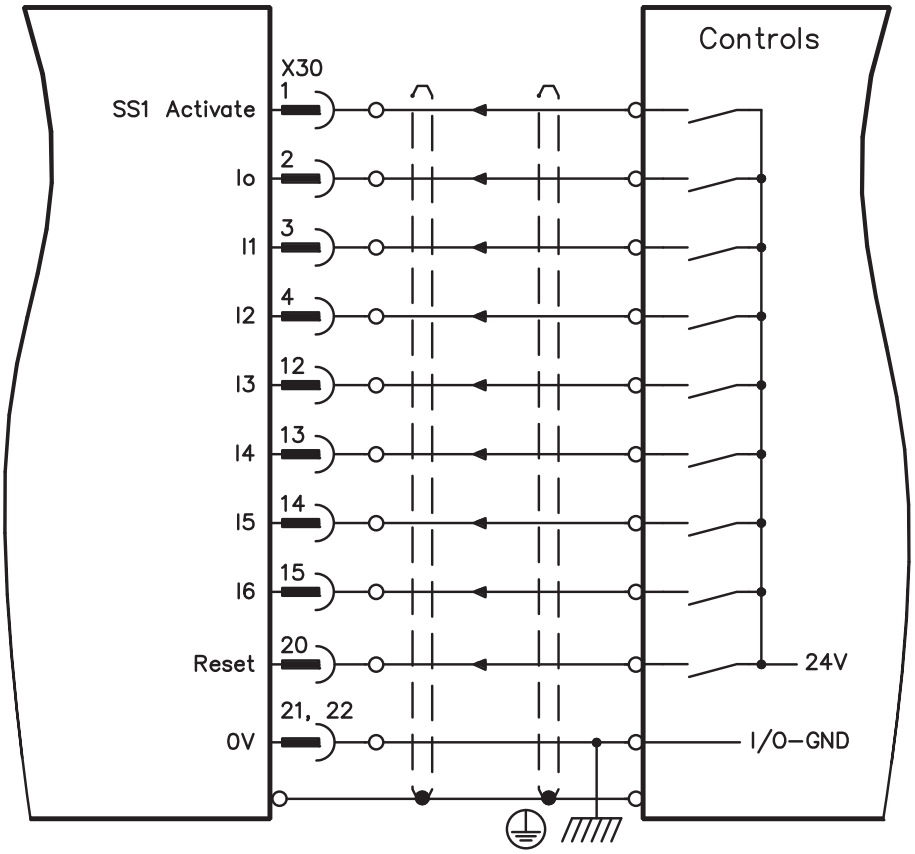

9.3.4.6 Wiring outputs S2-2

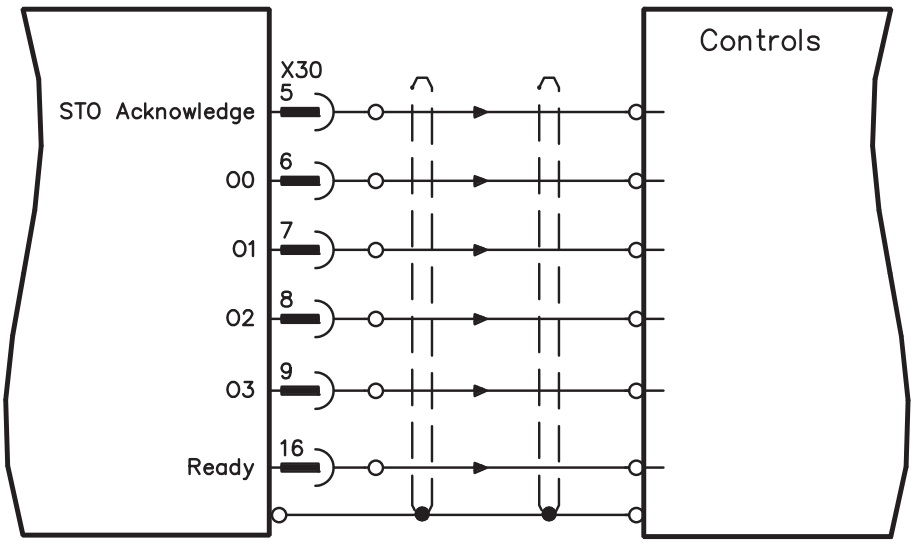

9.3.5 Expansion card "Safety 1-2" (S3)

This expansion card includes all available safety functions. Rotatory synchronous motors are allowed when using this safety card. All functions fulfill the safety requirements **SIL CL3** acc. to IEC 62061 respectively performance level **PLe** acc. to ISO 13849-1.

9.3.5.1 Safe drive functions S1-2

The safety functions are activated using the digital inputs on the expansion card. The following functions are available:

Safe Torque Off (STO)
With the STO function, the power supply to the motor is interrupted safely directly in the drive. This corresponds to an uncontrolled braking in accordance with IEC 60204-1, category 0.

Safe Stop 1 (SS1)
With the SS1 function, the drive is stopped by controlled braking and then the power supply to the motor is interrupted safely. This corresponds to an uncontrolled braking in accordance with IEC 60204-1, category 1.

Safe Stop 2 (SS2)
With the SS2 function, the drive is stopped by controlled braking and then remains at a controlled standstill (SOS). This corresponds to a controlled braking in accordance with IEC 60204-1, category 2.

Safe Operating Stop (SOS)
The SOS function monitors the stop position reached and prevents any deviation outside a defined range.

Safely Limited Speed (SLS)
The SLS function monitors the drive to ensure that it maintains a defined speed.

Safe Limited Increments (SLI)
The SLI function monitors that the drive maintains a relative position.

Safe Limited Position (SLP)
The SLP function monitors that the drive maintains an absolute position.

Safe Speed Range (SSR)
The SSR function checks the current speed of the drive against maximum and minimum limiting values.

Safe Direction (SDI)
The SDI function ensures that the drive can only move in one (defined) direction.

Safe Brake Control (SBC)
An external mechanical brake can be controlled by the 2 poles output "SBC+/SBC" of the safety card. SBC will become active with STO.

Safe Brake Test (SBT)
The safety function SBT can be used for testing the external mechanical brake and the internal motor holding brake.

9.3.5.2 Safety Notes S1-2

Comply with the operating instructions for the safety card. You can find the operating instructions on the CD-ROM provided with the product or on the website.

9.3.5.3 External encoder S1-2

Incremental encoder (TTL) or encoder with SSI signals can be connected to X31. Supply voltage for the external encoder must be connectoed to X30/11 (+) and X30/22 (-).

X31 Pin	Incremental encoder	SSI Encoder
1	Channel A+	Clock +
2	Channel B+	Data +
3	Reference Z+	n.c.
4	Supply U+	Supply U+
5	Shield	n.c.
6	Channel A-	Clock-
7	Channel B-	Data-
8	Reference Z-	n.c.
9	Supply 0 V	Supply 0 V

9.3.5.4 Wiring supply voltage 24 V for digital outputs

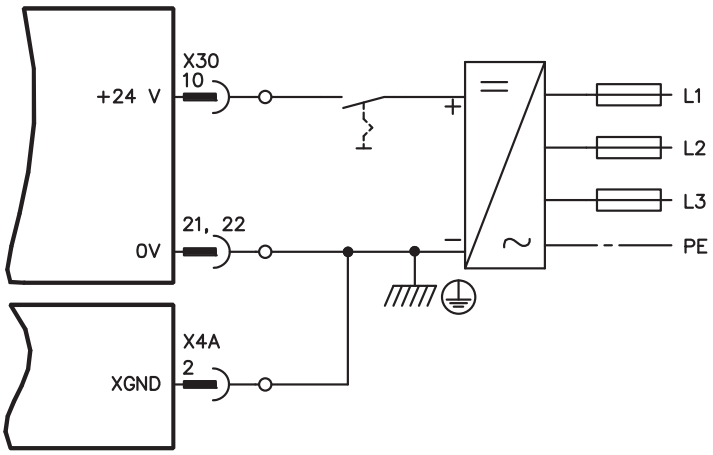

Input STO1-Enable [X4B/6] must not be connected.

9.3.5.5 Safe inputs and outputs S1-2

NOTICE

Inputs X30/1 SS1_Activate and X30/20 SS1_SIL3/Reset must always be connected.
Only tested outputs from a safety control system may be connected to all inputs on X30.

X30	Pin	E/A	Description
SS1 Activate	1	I	Activates function SS1
I0	2	I	Programmable, activate safety function X
I1	3	I	Programmable, activate safety function X
I2	4	I	Programmable, activate safety function X
STO Acknowledge	5	O	Status: STO activated
O0	6	O	Programmable, status: safety function X activated
O1	7	O	Programmable, status: safety function X activated
O2	8	O	Programmable, status: safety function X activated
O3	9	O	Programmable, status: safety function X activated
24V Supply	10	-	24V supply of digital outputs
Encoder Supply	11	-	Power supply for external encoder
I3	12	I	Programmable, activate safety function X
I4	13	I	Programmable, activate safety function X
I5	14	I	Programmable, activate safety function X
I6	15	I	Programmable, activate safety function X
Ready	16	O	Message "Safety card is ready to operate"
SBC+	17	O	Control external brake +
SBC-	18	O	Control external brake -
STO SIL CL3	19	O	Output single
SS1 SIL CL3/Reset	20	I	Input for SIL CL3 and Reset
0V Supply	21	-	0V supply of digital outputs
0V Supply	22	-	0V supply of digital outputs

9.3.5.6 Wiring inputs S1-2

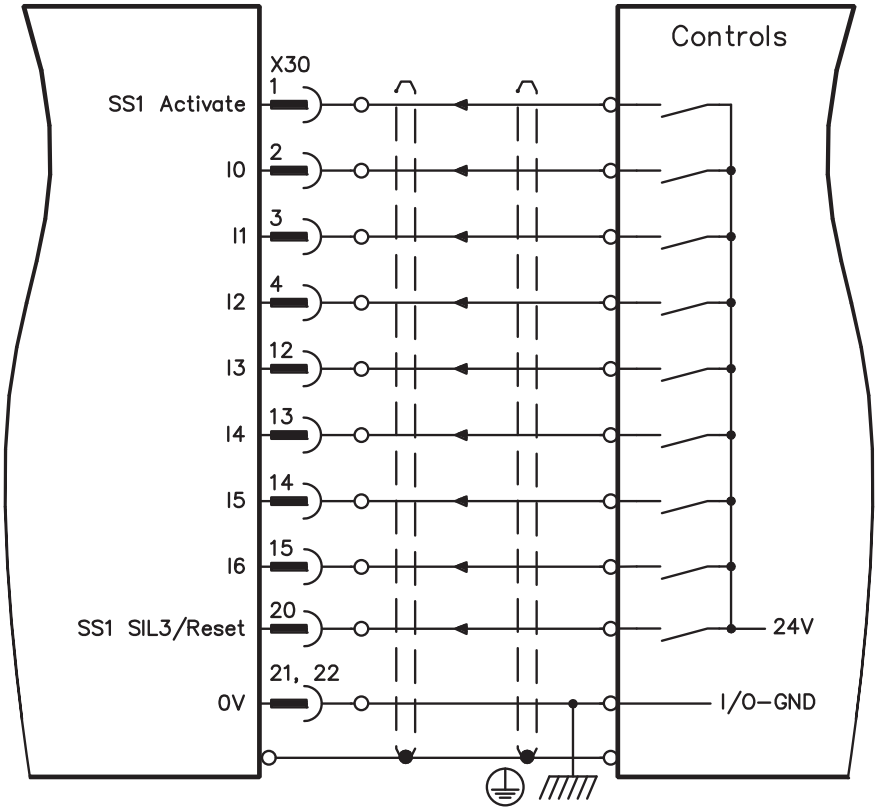

9.3.5.7 Wiring outputs S1-2

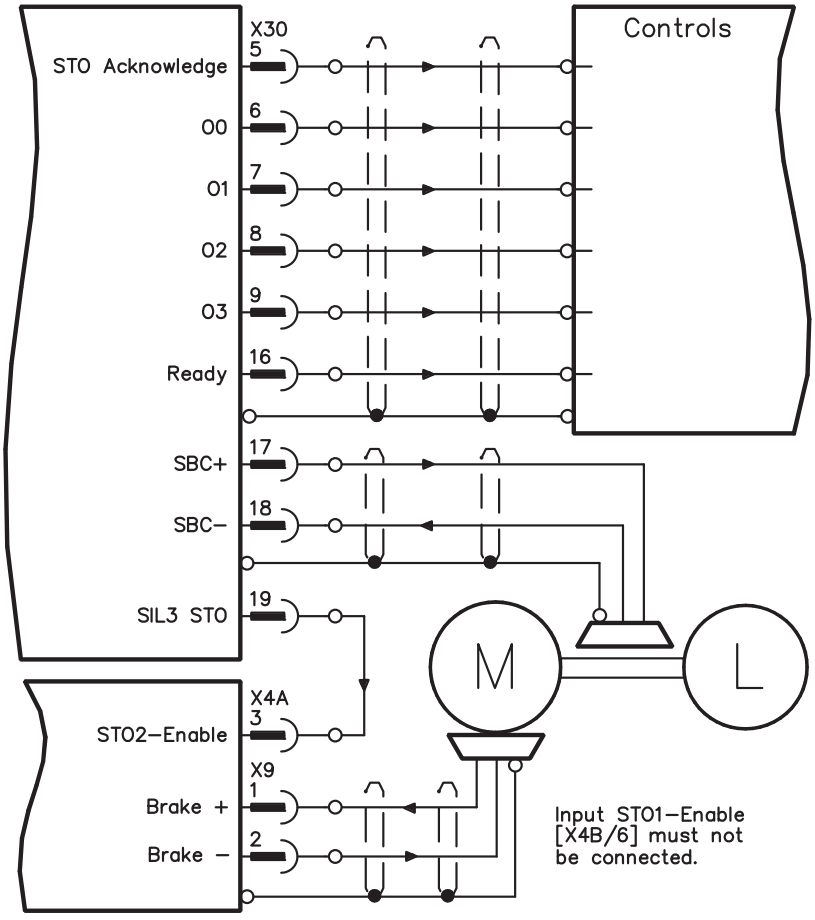

This page has been deliberately left free.

10 Appendix

10.1 Glossary

B	Brake circuit	Converts generative energy fed back by the motor during braking (generated energy) to heat.
C	Clock	Clock signal
	Common-mode voltage	The maximum amplitude of a disturbance (on both inputs) which a differential input can eliminate
	Counts	Internal count pulses, 1 pulse = $\frac{1}{2}^{20}$ $turn^{-1}$
	Continuous power of brake circuit	Mean power that can be dissipated in the brake circuit
	Current controller	Regulates the difference between the current setpoint and the actual value to 0 Output : power output voltage
D	DC bus link	Rectified and smoothed power voltage
	Disable	Removal of the ENABLE signal
E	Earth short	electrical connection between a phase and the protective earth (PE)
	Enable	Enable signal for the servo amplifier, Hardware-Enable with 24V signal to X3, Software-Enable command by setup Software, fieldbus or permanently set. Both are required for enabling the amplifier.
	ENABLE	Enable signal for the servo amplifier (+24 V)
F	Fieldbus interface	CANopen, PROFIBUS, SERCOS etc.
	Final speed (limit speed)	Maximum value for the speed normalization at ±10 V
G	GRAY-code	Special format for representing binary numbers
H	Holding brake	Brake in the motor, that can only be used when the motor is at standstill
I	I²t threshold	Monitoring of the r.m.s. current that is actually required
	Input drift	Temperature and age-dependent alteration of an analog input
	Incremental encoder interface	Position signaling by 2 signals with 90° phase difference (i.e. in quadrature), is not an absolute position output
	Ipeak, peak current	The effective value of the peak current
	Irms, effective current	The r.m.s. value of the continuous current
K	Kp, P-gain	Proportional gain of a control loop
L	Limit speed (final speed)	Maximum value for speed normalization at ±10 V
	Limit switch	Switch limiting the traverse path of the machine; implemented as n.c. (break) contact

M	Machine	The complete assembly of all connected parts or devices, of which at least one is movable
	Motion block	Data packet with all the position control parameters which are required for a motion task
	Multi-axis system	Machine with several independently driven axes
N	Natural convection	Free movement of air for cooling
O	Optocoupler	Optical connection between two electrically independent systems
P	P-controller	Control loop with purely proportional behavior
	Phase shift	Compensation for the lag between the electro-magnetic and magnetic fields in the motor
	PI-controller	Control loop with proportional and differential behavior
	Position controller	Regulates the difference between the position setpoint and the actual position to 0 Output: speed setpoint
	Potential isolation	electrically decoupled, electrical isolation
	Power contactor	System protection device with phase monitoring
	Pulse power of the brake circuit	Maximum power which can be dissipated in the brake circuit
R	Reset	New start of the microprocessor
	Resolver to Digital converter	Conversion of the analog resolver signals into digital information
	Reversing mode	Operation with a periodic change of direction
	Ring core	Ferrite rings for interference suppression
	ROD-interface	Incremental position output
S	Servo amplifier	Control device for regulating the speed, torque and position of a servomotor
	Setpoint ramps	Limits for the rate of change of the speed setpoint
	Short-circuit	here: electrically conductive connection between two phases
	Speed controller	Regulates the difference between the speed setpoint and the actual value to 0 Output : current setpoint
	SSI-interface	Cyclically absolute, serial position output
	Supply filter	Device to divert interference on the power supply cables to PET
	Tachometer voltage	Voltage proportional to the actual speed
	Thermal control	Temperature-sensitive device built into the motor winding (usually PTC)
	Tn, I-integration time	Integral component of a control loop
Z	Zero pulse	Output once per turn from incremental encoder, used to zero the machine

10.2 Order codes

The order numbers of accessories such as cables, brake resistors, mains supplies, etc., can be found in the accessories manual (CDROM or website).

10.2.1 Servo amplifiers

Article (standard version)*	EU order code	US order code
Servo amplifier S70102	S70102-NANANA	
Servo amplifier S70302	S70302-NANANA	
Servo amplifier S70602	S70602-NANANA	
Servo amplifier S71202	S71202-NANANA	
Servo amplifier S7120S	S7120S-NANANA	
Servo amplifier S72402	S72402-NANANA	
Servo amplifier S7240S	S7240S-NANANA	

*= Standard: with internal brake resistor, CANopen and EtherCAT onboard, dual channel STO, 208...480V mains voltage. See "Part number scheme" on p. 24.

Article (standard version with F2 option built Slot 2)	EU order code	US order code
Servo amplifier S70102-NAF2NA	S70102-NAF2NA	
Servo amplifier S70302-NAF2NA	S70302-NAF2NA	
Servo amplifier S70602-NAF2NA	S70602-NAF2NA	
Servo amplifier S71202-NAF2NA	S71202-NAF2NA	
Servo amplifier S7120S-NAF2NA	S7120S-NAF2NA	
Servo amplifier S72402-NAF2NA	S72402-NAF2NA	
Servo amplifier S7240S-NAF2NA	S7240S-NAF2NA	

Article (standard version with F2 option built in Slot 3)	EU order code	US order code
Servo amplifier S70102-NANAF2	S70102-NANAF2	
Servo amplifier S70302-NANAF2	S70302-NANAF2	
Servo amplifier S70602-NANAF2	S70602-NANAF2	
Servo amplifier S71202-NANAF2	S71202-NANAF2	
Servo amplifier S7120S-NANAF2	S7120S-NANAF2	
Servo amplifier S72402-NANAF2	S72402-NANAF2	
Servo amplifier S7240S-NANAF2	S7240S-NANAF2	

10.2.2 Memory Card

Article	EU order code	US order code
Industrial Memory Card (can remain in the drive)	DE-201257	in process

10.2.3 Expansion cards

10.2.3.1 Covers for Option Slots

Article	EU order code	US order code
Slot covers (1 for Slot 1 & 1 for 2 or 3)	DE-201295	in process

10.2.3.2 Slot 1

Article	EU order code	US order code
Expansion card DeviceNet	DE-103571	OPT-DN
Expansion card PROFIBUS DP	DE-106712	OPT-PB3
Expansion card SERCOS	DE-90879	OPT-SE
Expansion card I/0-14/08	DE-90057	OPT-EI
Expansion card SynqNet	DE-200073	OPT-SN
Expansion card FB-2to1	DE-201664	in process
Expansion module 2CAN	DE-201076	not available

10.2.3.3 Slot 2

Article	EU order code	US order code
Expansion card PosI/O	DE-200881	in process
Expansion card PosI/O-Monitor	DE-201294	in process

10.2.3.4 Slot 3

Article	EU order code	US order code
Expansion card PosI/O	DE-200881	in process
Expansion card PosI/O-Monitor	DE-201294	in process
Expansion card Safety 1-2, SIL CL2	DE-201873	in process
Expansion card Safety 2-2, SIL CL3	DE-201874	in process
STO Bridge (instead of Safety Card)	DE-200566	in process

10.2.4 Mating connectors

Article	EU order code	US order code
Mating connector X3A	DE-200447	CON-S7X3A
Mating connector X3B	DE-200448	CON-S7X3B
Mating connector X3C	DE-200957	CON-S7X3C
Mating connector X4A	DE-200449	CON-S7X4A
Mating connector X4B	DE-200450	CON-S7X4B
Mating connector X0	DE-200451	CON-S7X0
Mating connector X0F*	DE-200955	CON-S7X0F
Mating connector X0Y**	DE-200851	CON-S7X0Y
Mating connector X8	DE-200452	CON-S7X8
Mating connector X8F*	DE-200956	CON-S7X8F
Mating connector X8Y (with X4A mini)**	DE-201942	-
Mating connector X9	DE-200453	CON-S7X9

* F-Type: with spring action clamps for fast wiring

** Y-Type: splits one contact to two terminals.

10.3 Repair- or Disposal request Telefax form

To

Kollmorgen Europe GmbH
Pempelfurtstrasse 1
D-40880 Ratingen
Germany

Fax: +49 (0) 2102 9394 3444

Please advice dispatch information for (please select)

◯ **Repair**

◯ **Disposal**

of these products:

Product	Serial number	Reason ("fault", "return" or similar)

to this address:

Company	
Street	
Zip / City	
Country	
Specialist Name	
Telephone	
Telefax	
E-Mail	

City, Date Signature

10.4 Index

! 24V aux. supply, interface 68

A Abbreviations 9
Ambient temperature 31
Analog inputs 98
Assembly 54

B BTB/RTO 101
Baud rate 119
BiSS encoder analog 78
BiSS encoder digital 79
Block diagram (overview) 63
Brake resistor
Interface, ext 72
Technical data 33
Brake, see also motor-holding brake . . . 32

C CAN bus cable 103
CANopen interface 103
CE conformance 18
Capacitor Module 72
Comcoder interface 88
Conductor cross-sections 31
Connection diagram 65
Connector assignments 64
Connectors 30

D DC bus link, interface 70
Devicenet bus cable 134
Digital inputs 99
Dimensions 55
Disassembling 14
Disposal 15
Dynamic Braking 33

E Electronic gearing X1 93
Electronic gearing X5 147
Emergency Off 40
Emergency Stop 40
EnDat 2.1 encoder interface 80
EnDat 2.2 Encoder Interface 81
Enclosure protection 31
Encoder emulation X1 96
Encoder emulation X5 148
Error messages 122
EtherNet
EtherCat Protocol 104
Expansion card
-2CAN- 139
-DeviceNet- 132
-FB-2to1- 137
-I/O-14/08- 126
-PROFIBUS- 129
-PosI/O- 142
-PosI/O-Monitor- 142
-SERCOS- 130
-Safety S1-2 (S3)- 155
-Safety S2-2 (S4)- 152
-SynqNet- 135

F Fan assembly 56
Feedback 75
Feedback types 76
Fusing 30

G Glossary 159
Ground symbol 59
Grounding
Connection diagram 65
Installation 58

H Hall sensor interface 92
Hardware requirements 109
Hiperface encoder interface 82
Humidity 31
Storage 14
in operation 31

I Inputs
Analog setpoints 98
Analog, optional 150
Enable 100
STO-Enable 99
programmable 100
Installation
Electrical 57
Expansion card Slot1 125
Expansion card Slot2 141
Expansion card Slot3 151
Mechanical 53
Software 109

K Keypad operation 119

L LED display 119
Leakage current 51

M MMC memory card 105
Maintenance 14
Master-slave X1 95
Master-slave X5 147
Motor interface 74
Mounting position 31

N Nameplate 23
Noise emission 28

O Operating systems 109
Optical power 131
Option F2 141
Order codes 161
Outputs
Analog, optional 150
BTB/RTO 101
programmable 101

P PC cable 102
PC connection 102
Package supplied 23
Packaging 13
Part number scheme 24
Pollution level 31

Q Quickstart 110

R
RCD . . . 51
ROD 24V interface . . . 89
ROD 24V with Hall interface . . . 90
ROD 5V 350kHz . . . 87
ROD 5V with Hall interface . . . 88
ROD 5V, 1.5MHz . . . 86
ROD emulation X1 . . . 96
ROD emulation X5 . . . 148
RS232/PC, interface . . . 102
Re-forming . . . 107
Repair . . . 15
Repair request . . . 163
Resolver interface . . . 77

S
SSI Encoder 5V at X1 . . . 91
SSI Encoder 5V at X5 . . . 145
SSI emulation X5 . . . 149
STO . . . 41
Safe drive functions
- S1-2 card . . . 155
- S2-2 card . . . 152
- STO . . . 41

Safety characteristic data . . . 41
Safety instructions . . . 10
Setup . . . 107
Setup software . . . 108
Shield connection . . . 60
Shielding
- Connection diagram, . . . 65
- Installation . . . 58

Shock-hazard protection . . . 51
SinCos encoder w/o data channel . . . 84
SinCos encoder with Hall . . . 85
SinCos+SSI at X1 . . . 83
SinCos+SSI at X5 . . . 146
Site . . . 53
Site altitude . . . 31
Stacking height . . . 14
Standards . . . 18
Station adress
- Can bus . . . 119
- DeviceNet . . . 133
- SERCOS . . . 131

Step/Direction 24V . . . 94
Step/Direction 5V at X1 . . . 94
Step/Direction 5V at X5 . . . 147
Stop . . . 39
Storage . . . 14
Supply connection, interface . . . 68
Supply networks . . . 66
Supply voltage . . . 31
Switch-on/switch-off behavior . . . 36
System components, overview . . . 62

T
Target group . . . 11
Technical data . . . 28
Tightening torques, connectors . . . 30
Transport . . . 13
Trouble shooting . . . 124

U
Use as directed
- Safety Function STO . . . 42
- Servo amplifiers . . . 12
- Setup Software . . . 108

V
Ventilation
- Installation . . . 53
- Technical data . . . 31

Vibrations . . . 31

W
Warnings . . . 123
Wiring . . . 58

Service

We are committed to quality customer service. In order to serve in the most effective way, please contact your local sales representative for assistance.
If you are unaware of your local sales representative, please contact the Customer Support.

Europe

KOLLMORGEN Customer Support Europe
Internet www.kollmorgen.com
E-Mail technik@kollmorgen.com
Tel.: +49 (0)2102 - 9394 - 0
Fax: +49 (0)2102 - 9394 - 3155

KOLLMORGEN UK Website

European Product WIKI

North America

KOLLMORGEN Customer Support North America
Internet www.kollmorgen.com
E-Mail support@kollmorgen.com
Tel.: +1 - 540 - 633 - 3545
Fax: +1 - 540 - 639 - 4162

KOLLMORGEN US Website

Asia

KOLLMORGEN
Internet www.kollmorgen.com
E-Mail sales.china@kollmorgen.com
Tel: +86 - 400 666 1802
Fax: +86 - 10 65 15 0263

KOLLMORGEN CN Website